STARBUCKS COFFEE HOUSE
RIVIERA SHOPPING CENTER
VENTURA, CALIFORNIA

ABBREVIATIONS

A.F.F.	ABOVE FINISH FLOOR
A.F.S.	ABOVE FINISH SURFACE
ALT.	ALTERNATE
CBC	CALIF. BUILDING CODE
C.L.	CENTER LINE
CLG.	CEILING
COL.	COLUMN
CONC.	CONCRETE
CPT.	CARPET
CT	CERAMIC TILE
DN.	DOWN
D.S.	DOWNSPOUT
DTL.	DETAIL
(E)	EXISTING
ELEC.	ELECTRICAL
EQ.	EQUAL
E.W.	EACH WAY
EXT.	EXTERIOR
F.F.	FINISH FLOOR
FIN. CLG.	FINISH CEILING
FIN. FLR.	FINISH FLOOR
F.O.	FACE OF
F.O.C.	FACE OF CONCRETE
F.O. FIN.	FACE OF FINISH
F.O.M.	FACE OF MASONRY
F.O.S.	FACE OF STUD
F.O. SHTG.	FACE OF SHEATHING
FRP	FIBER REINFORCED PLASTIC PANELS
F.S.	FINISH SURFACE
GA.	GAUGE
GYP. BD.	GYPSUM BOARD
HR.	HOUR
INT.	INTERIOR
LAV.	LAVATORY
MIN.	MINUTE
MFR.	MANUFACTURER
(N)	NEW
N.A.	NOT APPLICABLE
N.I.C.	NOT IN CONTRACT
O.C.	ON CENTER
O.F.C.I.	OWNER–FURNISHED, CONTRACTOR–INSTALLED
O.F.O.I.	OWNER–FURNISHED, OWNER–INSTALLED
OPP.	OPPOSITE
P.L.	PROPERTY LINE
REF.	REFRIGERATOR
REV.	REVERSE
R.O.W.	RIGHT–OF–WAY
R.T.S.	RUBBER TOP SET
SHT.	SHEET
SIM.	SIMILAR
SPECS.	SPECIFICATIONS
SV	SHEET VINYL
T.O.	TOP OF
T.O.C.	TOP OF CONCRETE
T.O.P.	TOP OF PARAPET
T.O.PL.	TOP OF PLATE
T.O. SHTG	TOP OF SHEATHING
T.O.W.	TOP OF WALL
TYP.	TYPICAL
U.N.O	UNLESS NOTED OTHERWISE
W/	WITH
WD	WOOD

PROJECT TEAM

ARCHITECT:
RASMUSSEN & ASSOCIATES
21 S. CALIFORNIA STREET
FOURTH FLOOR
VENTURA, CA. 93001
VOICE: (805)648–1234 EX:18
CONTACT: SCOTT BOYDSTUN
EMAIL: SBoydstun@RA–Arch.com

OWNER:
ATHENA PROPERTY MANAGEMENT
16795 VON KARMAN
SUITE #200
IRVINE, CA 92606
VOICE: (949)398–8750
CONTACT: JEFF LOCHNER
EMAIL: www.athena–pm.com

CIVIL ENGINEER:
JENSEN DESIGN & SURVEY
1672 DONLON STREET
VENTURA, CA. 93003
VOICE: (805)645–6977
CONTACT: RICK GIROUX
EMAIL:RGiroux@JDSCivil.com

STRUCTURAL ENGINEER:
STORK, WOLFE & ASSOCIATES
599 HIGUERA STREET, SUITE H
SAN LUIS OBISPO, CA. 93401
VOICE: (805)548–8600
CONTACT: JUSTIN WOLFE
EMAIL: Justin@SWA–Engineers.com

MECHANICAL ENGINEER:
NIBECKER & ASSOCIATES
475 SOUTH SEAWARD AVE.
VENTURA, CA. 93001
VOICE: (805)667–8253
CONTACT: DON NIBECKER
EMAIL: DNibecker@Nibecker.com

ELECTRICAL ENGINEER:
FERRANTI ENGINEERING
1211 MARICOPA HWY,
SUITE #250
OJAI, CA. 93023
VOICE: (805)705–4772
CONTACT: DALE FERRANTI
EMAIL: DaleFerranti@Live.com

LANDSCAPE ARCHITECT:
LRM LANDSCAPE ARCHITECTURE
10335 JEFFERSON BLVD.
CULVER CITY, CA 90232
VOICE: (310)839–6600 EX.24
CONTACT: DAVID LARKINS
EMAIL: dlarkins@lrmltd.com

SOILS ENGINEER:
MOORE TWINING ASSOCIATES
2527 FRESNO STRRET
FRESNO, CA. 93721
VOICE: (559)268–7021
CONTACT: ALLEN HARKER
EMAIL: allenh@mooretwining.com

LIST OF SYMBOLS

- 5 — WINDOW TYPE
- 6 — DOOR CONSECUTIVE NUMBER
- 106 — ROOM CONSECUTIVE NUMBER
- 3 / A8.1 — INDICATES DETAIL NUMBER; SHEET WHERE DETAIL IS DRAWN
- 2 / A5.1 — SECTION; SHEET WHERE DETAIL IS DRAWN
- 2 / A5.1 — INTERIOR ELEVATION IDENTIFICATION; SHEET WHERE INTERIOR ELEVATION IS DRAWN
- 2 — NUMBER OF CIRCLE CORRESPONDS TO NUMBER ON NOTE LEGEND
- A — LETTER IN OVAL CORRESPONDS TO WALL CONSTRUCTION TYPE
- N — NORTH ARROW, ORIENTATION TO TRUE NORTH
- 2 — REVISION CLOUD INDICATES AREA REVISED
- WORK POINT, CONTROL, ELEVATION OR DATUM POINT

MATERIALS LEGEND

- EARTH
- GRAVEL OR CRUSHED ROCK BASE
- ASPHALTIC CONCRETE PAVING
- CONCRETE
- MASONRY
- PLYWOOD
- WOOD, ROUGH OR DIM. LUMBER
- INSULATION
- PLASTER
- GYPSUM WALL BOARD

APPLICABLE CODES

2016 CALIFORNIA BUILDING CODE (CBC)

2016 CALIFORNIA ELECTRICAL CODE (CEC)

2016 CALIFORNIA MECHANICAL CODE (CMC)

2016 CALIFORNIA PLUMBING CODE (CPC)

2016 CALIFORNIA FIRE CODE (CFC)

2016 CALIFORNIA ENERGY CODE (CEC)

2016 CALIFORNIA GREEN BUILDING CODE (CGBC)

GREEN BUILDING MEASURES

PROJECT SHALL COMPLY WITH ALL REQUIRED GREEN BUILDING CODE MEASURES, SEE SHEETS GB1 & GB2.

DEFERRED APPROVALS

FOR THE PRODUCTS OR SYSTEMS INDICATED BELOW THE CONTRACTOR SHALL PERFORM THE FOLLOWING:

A. PREPARE SHOP DRAWINGS FOR THE PRODUCT OR SYSTEMS ADEQUATELY DESCRIBING THE WORK. PREPARE CALCULATIONS AS REQUIRED. FOR ALL ITEMS WITH CALCULATIONS, THE DRAWINGS AND CALCULATIONS SHALL BE STAMPED AND SIGNED BY A LICENSED CALIFORNIA ENGINEER OF THE APPROPRIATE DISCIPLINE.

B. CONTRACTOR SHALL SUBMIT THE DRAWINGS AND CALCULATIONS TO THE ARCHITECT FOR REVIEW. CONTRACTOR SHALL RESPOND TO ANY COMMENTS THAT THE ARCHITECT HAS, AND RESUBMIT DRAWINGS AND CALCULATIONS AS REQUIRED.

C. UPON APPROVAL BY THE ARCHITECT, THE CONTRACTOR SHALL SUBMIT THE DRAWINGS AND CALCULATIONS TO THE AUTHORITY HAVING JURISDICTION FOR APPROVAL. CONTRACTOR SHALL REPRODUCE THE QUANTITY OF DRAWINGS AND CALCULATIONS AS REQUIRED BY THE JURISDICTION, COMPLETE THE PERMIT APPLICATION, AND PAY PLANCHECK AND PERMIT FEES AS MAY BE APPLICABLE.

D. NO INSTALLATION SHALL BE PERFORMED UNTIL SUCH TIME AS THE CONTRACTOR HAS RECEIVED APPROVAL FROM THE AUTHORITY HAVING JURISDICTION.

DEFERRED APPROVALS

1. FIRE SPRINKLER SYSTEM CONFORMING TO NFPA 13 SHALL BE PROVIDED. SEPARATE SUBMITTAL AND PERMIT REQUIRED.
2. STOREFRONT SYSTEM.
3. ROOF TRUSSES.

GENERAL NOTES

STORM WATER RUNOFF SHALL NOT DISCHARGE FROM THE CONSTRUCTION SITE TO THE CITY STREETS OR MUNICIPAL STORM DRAIN SYSTEM WITHOUT TREATMENT BY A SUITABLE POLLUTION CONTROL DEVICE. STORM WATER RUNOFF DISCHARGES WITHOUT TREATMENT IS A VIOLATION OF THE CITY'S STORM WATER ORDINANCE. DISCHARGING ANY MATERIAL OTHER THAN UNCONTAMINATED STORM WATER RUNOFF TO CITY STREETS OR TO THE MUNICIPAL STORM DRAIN SYSTEM IS PROHIBITED AND IS A VIOLATION OF THE MUNICIPAL CODE.

SITE MANAGER TO CONTACT: RUBY ESPINOSA
PHONE: (949) 398–8750

FIRE DEPARTMENT NOTES

1. ADDRESS NUMBERS: APPROVED ADDRESS NUMBERS, BUILDING NUMBERS OR APPROVED BUILDING IDENTIFICATION SHALL BE PLACED IN A POSITION THAT IS PLAINLY LEGIBLE AND VISIBLE FROM THE STREET, ROAD, ALLEY, AND WALKWAYS GIVING ACCESS TO AND WITHIN THE PROPERTY. THESE NUMBERS SHALL CONTRAST WITH THEIR BACKGROUND. ADDRESS NUMBERS SHALL BE ARABIC NUMERALS OR ALPHABET LETTERS. NUMBERS SHALL BE A MINIMUM OF 4 INCHES (102 MM) HIGH WITH A MINIMUM STROKE WIDTH OF 0.5 INCH (12.7 MM) AND SHALL BE ILLUMINATED IN AN APPROVED MANNER (IF NUMBERS ARE ON THE EXTERIOR). NUMBER HEIGHT AND STROKE WIDTH SHALL BE INCREASED AS NEEDED FOR LEGIBILITY BASED ON VISIBILITY DISTANCE.
2. REQUIRED VCFD INSPECTIONS: FOR ALL INSPECTIONS, CALL 805–339–4333. FIRE DEPARTMENT INSPECTIONS FOR THIS PROJECT ARE:
   - OVERHEAD SPRINKLER ROUGH INSPECTION
   - SPRINKLER FINAL

CODE SUMMARY

PROJECT SCOPE

CONSTRUCT 1,905 S.F. SHELL BUILDING AND SITE IMPROVEMENTS FOR FUTURE STARBUCKS COFFEE HOUSE WITH DRIVE–THRU. CMU TRASH ENCLOSURES TO BE CONSTRUCTED AT SHELL BUILDING AND AT EXISTING ADJACENT BUILDING.

NO CERTIFICATE OF OCCUPANCY WILL BE ISSUED FOR SHELL BUILDING.

TENANT IMPROVEMENTS WILL BE UNDER SEPARATE SUBMITTAL AND PERMIT.

HEALTH DEPARTMENT REVIEW WILL BE A PART OF TENANT IMPROVEMENT SUBMITTAL / PERMIT.

ASSESSORS PARCEL NUMBER 084–0–072–315

PROJECT IS UNDER THE JURISDICTION OF THE CITY OF VENTURA.

SITE AREA 12,342 S.F.

CODE ANALYSIS

THERE ARE TWO EXISTING BUILDINGS ON THIS PARCEL.

1. ONE EXISTING BUILDING IS A MULTI TENANT BUILDING LOCATED MORE THAN 500' FROM THIS PROPOSED BUILDING. IT IS NOT INCLUDED IN THIS CODE ANALYSIS.
2. THE OTHER EXISTING BUILDING IS A RESTAURANT LOCATED 18'–6" AWAY FROM THIS PROPOSED BUILDING. BECAUSE OF THE PROXIMITY THESE TWO BUILDINGS WILL BE CONSIDERED AS PORTIONS OF ONE BUILDING (CBC 503.1.2) SEE ADDITIONAL NOTES ON CODE ANALYSIS PARTIAL SITE PLAN ON SHEET A1.1.

PROPOSED BUILDING AND EXISTING BUILDING COMBINED:

CONSTRUCTION TYPE VB (CBC 602.5)

FIRE SEPARATION DISTANCE (CBC TABLE 602)
NORTH 80'–2" TO PROPERTY LINE
EAST 86'–3" TO PROPERTY LINE
SOUTH 60'–6" TO PROPERTY LINE
WEST 71'–5" TO PROPERTY LINE

AT NORTH, EAST, SOUTH AND WEST WALLS, NO LIMIT FOR UNPROTECTED OPENINGS (CBC TABLE 705.8)

PROPOSED BUILDING 1,905 S.F., FULLY FIRE SPRINKLERED
OCCUPANCY GROUP B, RESTAURANT WITH LESS THAN 50 OCCUPANTS (CBC 034)

EXISTING BUILDING 13,045 S.F., FULLY FIRE SPRINKLERED
OCCUPANCY GROUP A2 (PER RECORD DRAWINGS AT CITY)

COMBINED AREA 14,950 S.F.
24,000 S.F. ALLOWED FOR A2 OCCUPANCY
36,000 S.F. ALLOWED FOR B OCCUPANCY
THEREFORE THE COMBINED BUILDING AREA IS ALLOWED.

BUILDINGS SHALL HAVE NON–SEPARATED OCCUPANCIES (CBC 508.3)

PROPOSED BUILDING

BUILDING OCCUPANCY LOAD CALCULATION (SEE SCHEMATIC PLAN BELOW)
FOOD PREP AREA 195 S.F./200 = 1
WORK ROOM 316 S.F./300 = 1
DINING AREA 684 S.F./15 = 46 (33 SEATS PROVIDED)

BUILDING OCCUPANCY LOAD 48 (CBC TABLE 1004.1.2)

EXITS PROVIDED 3

NUMBER OF STORIES 1

CLASS A ROOF PROVIDED (CBC TABLE 1505.1)

PATIO OCCUPANCY LOAD CALCULATION

DINING AREA 600 SF/15 = 40 (28 SEATS PROVIDED)

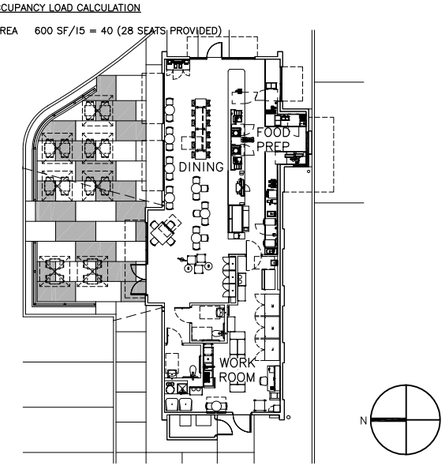

SCHEMATIC FLOOR PLAN FOR OCCUPANCY LOAD*
(NOT TO SCALE)

*REFERENCE ONLY, NOT A PART OF THIS PERMIT.
TENANT IMPROVEMENTS UNDER SEPARATE PERMIT

SEATING SHOWN IS NON–FIXED. ALL SEATING SHOWN IS SCHEMATIC. FINAL SEATING PLAN SHALL BE SUBMITTED WITH STARBUCKS TENANT IMPROVEMENT DRAWINGS (NOT A PART OF THIS PERMIT)

INDEX OF DRAWINGS

VICINITY MAP

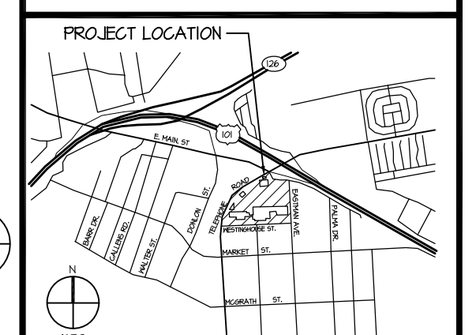

RASMUSSEN & ASSOCIATES
Architecture
Planning
Interiors
21 S. California Street
Fourth Floor
Ventura, California 93001
(805) 648–1234

2018-01-16 PRELIMINARY SET
NOT FOR CONSTRUCTION

LICENSED ARCHITECT SCOTT RASMUSSEN C–4848 REN. 9-30-19 STATE OF CALIFORNIA

Sheet Title: TITLE SHEET

Revisions	
1/16/18 P.C.CORR.	

R&A No:	A161305
Date:	10/18/17
Drawn:	L.I.
Checked:	
Consult. No:	J.J.L.

RIVIERA SHOPPING CENTER
STARBUCKS COFFEE HOUSE
4710 TELEPHONE ROAD
VENTURA, CALIFORNIA 93003

Sheet No.
T

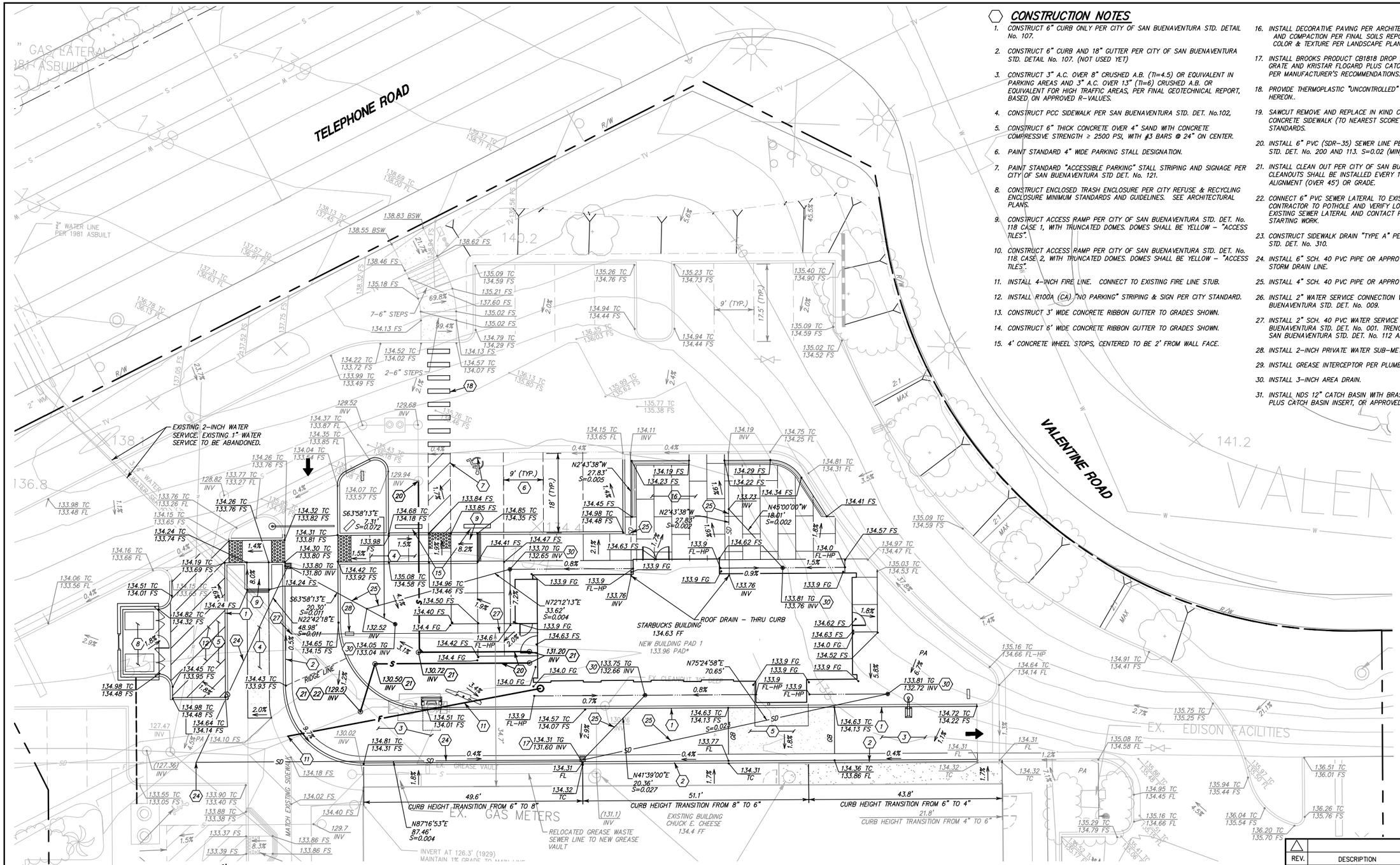

CONSTRUCTION NOTES

1. CONSTRUCT 6" CURB ONLY PER CITY OF SAN BUENAVENTURA STD. DETAIL No. 107.
2. CONSTRUCT 6" CURB AND 18" GUTTER PER CITY OF SAN BUENAVENTURA STD. DETAIL No. 107. (NOT USED YET)
3. CONSTRUCT 3" A.C. OVER 8" CRUSHED A.B. (TI=4.5) OR EQUIVALENT IN PARKING AREAS AND 3" A.C. OVER 13" (TI=6) CRUSHED A.B. OR EQUIVALENT FOR HIGH TRAFFIC AREAS, PER FINAL GEOTECHNICAL REPORT, BASED ON APPROVED R-VALUES.
4. CONSTRUCT PCC SIDEWALK PER SAN BUENAVENTURA STD. DET. No.102,
5. CONSTRUCT 6" THICK CONCRETE OVER 4" SAND WITH CONCRETE COMPRESSIVE STRENGTH ≥ 2500 PSI, WITH #3 BARS @ 24" ON CENTER.
6. PAINT STANDARD 4" WIDE PARKING STALL DESIGNATION.
7. PAINT STANDARD "ACCESSIBLE PARKING" STALL STRIPING AND SIGNAGE PER CITY OF SAN BUENAVENTURA STD DET. No. 121.
8. CONSTRUCT ENCLOSED TRASH ENCLOSURE PER CITY REFUSE & RECYCLING ENCLOSURE MINIMUM STANDARDS AND GUIDELINES. SEE ARCHITECTURAL PLANS.
9. CONSTRUCT ACCESS RAMP PER CITY OF SAN BUENAVENTURA STD. DET. No. 118 CASE 1, WITH TRUNCATED DOMES. DOMES SHALL BE YELLOW – "ACCESS TILES".
10. CONSTRUCT ACCESS RAMP PER CITY OF SAN BUENAVENTURA STD. DET. No. 118 CASE 2, WITH TRUNCATED DOMES. DOMES SHALL BE YELLOW – "ACCESS TILES".
11. INSTALL 4-INCH FIRE LINE. CONNECT TO EXISTING FIRE LINE STUB.
12. INSTALL R100A (CA) "NO PARKING" STRIPING & SIGN PER CITY STANDARD.
13. CONSTRUCT 3' WIDE CONCRETE RIBBON GUTTER TO GRADES SHOWN.
14. CONSTRUCT 6' WIDE CONCRETE RIBBON GUTTER TO GRADES SHOWN.
15. 4' CONCRETE WHEEL STOPS, CENTERED TO BE 2' FROM WALL FACE.
16. INSTALL DECORATIVE PAVING PER ARCHITECT'S PLANS. AGGREGATE BASE AND COMPACTION PER FINAL SOILS REPORT. DECORATIVE SPECIFICATIONS, COLOR & TEXTURE PER LANDSCAPE PLANS.
17. INSTALL BROOKS PRODUCT CB1818 DROP INLET WITH TRAFFIC RATED STEEL GRATE AND KRISTAR FLOGARD PLUS CATCH BASIN INSERT FILTER. INSTALL PER MANUFACTURER'S RECOMMENDATIONS.
18. PROVIDE THERMOPLASTIC "UNCONTROLLED" CROSSWALK PER DETAIL "A" HEREON..
19. SAWCUT REMOVE AND REPLACE IN KIND CURB/ CURB AND GUTTER, CONCRETE SIDEWALK (TO NEAREST SCORE LINE) & ASPHALT PER CITY STANDARDS.
20. INSTALL 6" PVC (SDR-35) SEWER LINE PER CITY OF SAN BUENAVENTURA STD. DET. No. 200 AND 113. S=0.02 (MIN)
21. INSTALL CLEAN OUT PER CITY OF SAN BUENAVENTURA STD. No. 203. CLEANOUTS SHALL BE INSTALLED EVERY 100' AND AT AL CHANGES IN ALIGNMENT (OVER 45°) OR GRADE.
22. CONNECT 6" PVC SEWER LATERAL TO EXISTING 6" SEWER LATERAL.. CONTRACTOR TO POTHOLE AND VERIFY LOCATION, DEPTH, AND SIZE OF EXISTING SEWER LATERAL AND CONTACT PROJECT CIVIL ENGINEER PRIOR TO STARTING WORK.
23. CONSTRUCT SIDEWALK DRAIN "TYPE A" PER CITY OF SAN BUENAVENTURA STD. DET. No. 310.
24. INSTALL 6" SCH. 40 PVC PIPE OR APPROVED EQUAL. CONNECT TO EXISTING STORM DRAIN LINE.
25. INSTALL 4" SCH. 40 PVC PIPE OR APPROVED EQUAL.
26. INSTALL 2" WATER SERVICE CONNECTION WITH 2" METER PER CITY OF SAN BUENAVENTURA STD. DET. No. 009.
27. INSTALL 2" SCH. 40 PVC WATER SERVICE 36" DEEP PER CITY OF SAN BUENAVENTURA STD. DET. No. 001. TRENCH AND BACKFILL PER CITY OF SAN BUENAVENTURA STD. DET. No. 112 AND 113.
28. INSTALL 2-INCH PRIVATE WATER SUB-METER.
29. INSTALL GREASE INTERCEPTOR PER PLUMBING PLANS.
30. INSTALL 3-INCH AREA DRAIN.
31. INSTALL NDS 12" CATCH BASIN WITH BRASS GRATE AND KRISTAR FLOGARD PLUS CATCH BASIN INSERT, OR APPROVED EQUAL.

2018-01-16 PRELIMINARY SET
NOT FOR CONSTRUCTION

GRADING

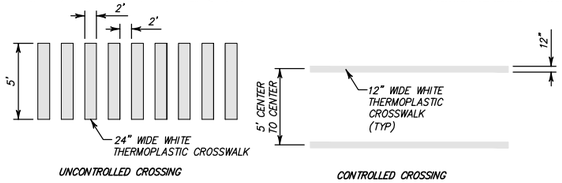

A PAINTED CROSSWALK DETAIL
NOT TO SCALE

NOTE:
*PAD ELEVATION IS BASED OFF OF STORK, WOLFE, & ASSOCIATES STRUCTURAL PLANS, WHICH SHOW A 4" SLAB THICKNESS UNDERLAIN BY A CLASS "A" MEMBRANE OVER 4" AGGREGATE BASE. REFERENCE SHEET S2.1.

NOTE:
THIS PLAN IS APPROVED FOR CONSTRUCTION WHEN SIGNED BY THE PERMITTING AGENCY AND CIVIL ENGINEER, AND A PERMIT HAS BEEN ISSUED.

REGISTERED PROFESSIONAL ENGINEER FREDERICK T. GIROUX No. C 057289 Exp. 12-31-19 CIVIL STATE OF CALIFORNIA

PREPARED BY:
JENSEN DESIGN & SURVEY, INC
1672 DONLON STREET
VENTURA, CALIF. 93003
PHONE 805/654-6977
FAX 805/654-6979
www.jdscivil.com
FREDERICK T. GIROUX RCE 057289 (EXP 12-31-19) DATE

REV.	DESCRIPTION	CK'D	APP.	DATE

PUBLIC WORKS DEPARTMENT — LAND DEVELOPMENT DIVISION

CITY OF SAN BUENAVENTURA
STARBUCKS
GRADING IMPROVEMENT PLAN
RIVIERA SHOPPING CENTER

DRN. BY: RQ | DES. BY: FTG | CK'D BY: FTG

LAND DEVELOPMENT ENGINEER — R.C.E. NUMBER 62381 — DATE

CITY ENGINEER — R.C.E. NUMBER 59254 — DATE

SID # XX-XXX | SHEET 3A OF 10 | FILE NO. 2017-D-xxx

J:\Art\5801\Eng\Improvement Plans\STAR BUCK'S\5801-GI_GR-GR.dwg Jan 16, 2018, 9:22am rgrioux

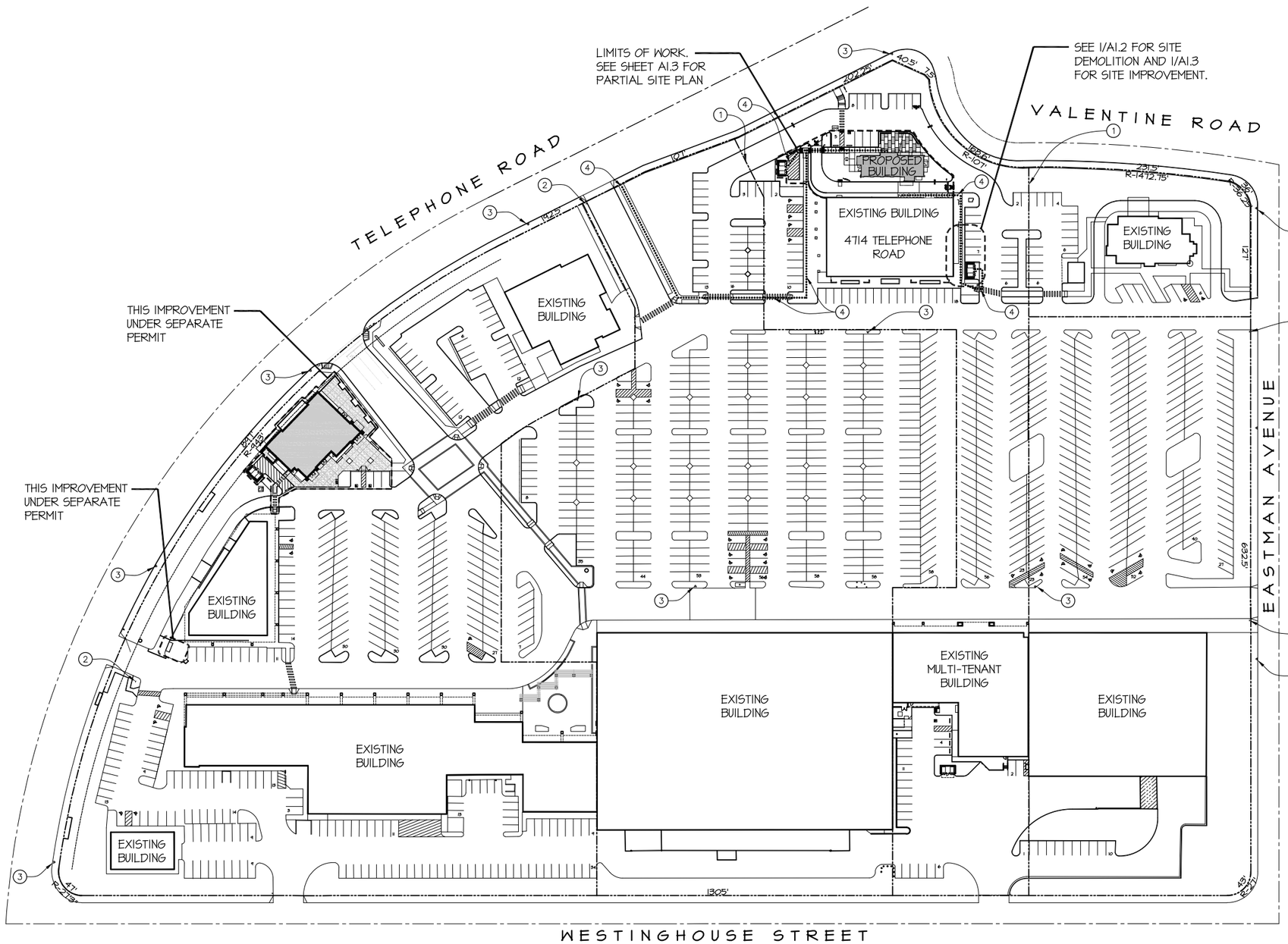

MASTER SITE PLAN

SCALE 1" : 60'-0"

0 20 40 60 80 100 200

N

○ NOTE LEGEND

1. PROPERTY LINES.
2. EXISTING ACCESSIBLE PARKING "TOW AWAY" SIGN AT PARKING LOT ENTRANCE.
3. EXISTING FIRE HYDRANT.
4. EXISTING ACCESSIBLE PATH OF TRAVEL FROM PUBLIC RIGHT OF WAY TO BUILDING AND FROM BUILDINGS TO TRASH ENCLOSURE. SEE NOTE 10 UNDER GENERAL NOTES ON SHEET A3.2

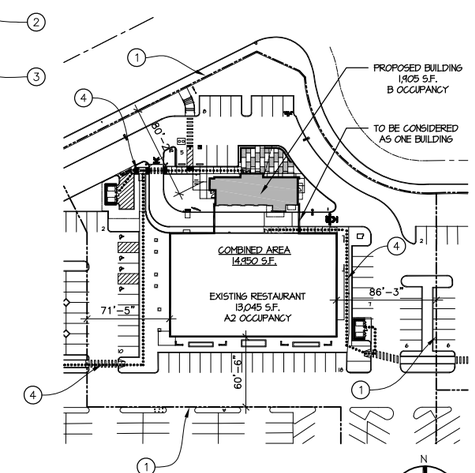

1 CODE ANALYSIS PARTIAL SITE PLAN

SCALE 1" : 60'-0"

N

FILE PATH & NAME: \\RA-DATA01\DATA\PROJECTS\A161305 RIVIERA SHOPPING CENTER STARBUCKS\DRAWINGS\CONST DOCS\A1.1 – A1.3 – SITE.DWG PLOTTED: 4:43 PM

THIS SHEET WAS ORIGINALLY PRINTED ON A 24"x36" SHEET.

RASMUSSEN & ASSOCIATES
Architecture
Planning
Interiors
21 S. California Street
Fourth Floor
Ventura, California 93001
(805) 648-1234

2018-01-16 PRELIMINARY SET
NOT FOR CONSTRUCTION

LICENSED ARCHITECT LANCE RASMUSSEN C-4848 REN. 9-30-18 STATE OF CALIFORNIA

Sheet Title: MASTER SITE PLAN

Revisions	
R&A No:	A161305
Date:	10/18/17
Drawn:	L.T.
Checked:	J.J.L.
Consult. No:	

RIVIERA SHOPPING CENTER
STARBUCKS COFFEE HOUSE

4710 TELEPHONE ROAD
VENTURA, CALFORNIA 93003

Sheet No.
A1.1

FILE PATH & NAME: \\RA-DATA01\DATA\PROJECTS\A161305 RIVERA SHOPPING CENTER STARBUCKS\DRAWINGS\CONST DOCS\A1.1 – A1.3 – SITE.DWG PLOTTED: 4:43 PM

THIS SHEET WAS ORIGINALLY PRINTED ON A 24"x36" SHEET.

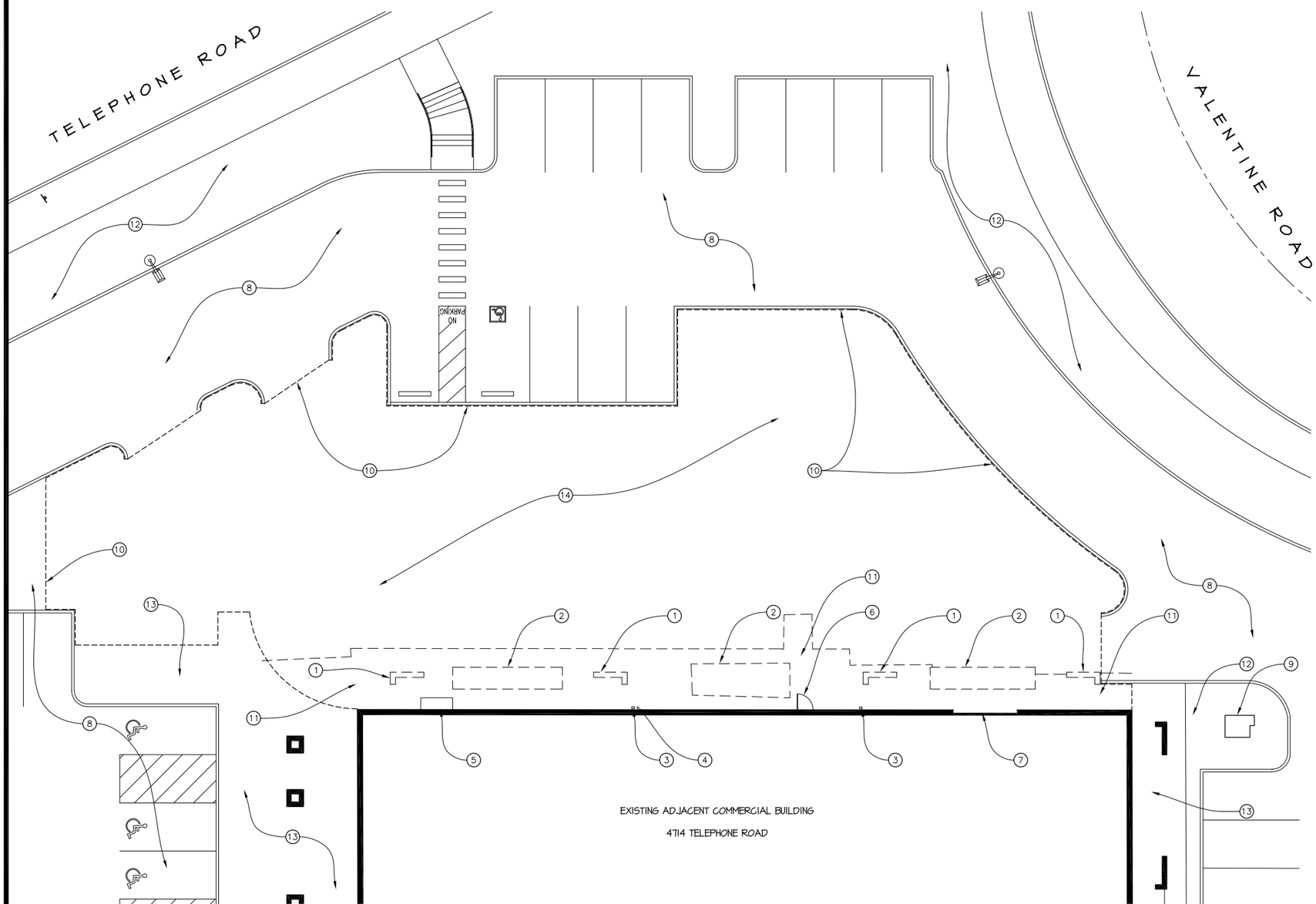

PARTIAL DEMO SITE PLAN

SCALE 1" : 10'-0"

0 5 10 15 20 25 50

N

NOTE LEGEND

1. EXISTING NON-STRUCTURAL FIN WALLS TO BE REMOVED. PATCH FINISH AT BUILDING WALLS.
2. EXISTING BRICK PLANTER TO BE REMOVED. CAP IRRIGATION LINES.
3. EXISTING DOWNSPOUT TO REMAIN. PROTECT IN PLACE.
4. EXISTING PIPE TO REMAIN. PROTECT IN PLACE.
5. EXISTING GAS METERS TO REMAIN. PROTECT IN PLACE.
6. EXISTING DOOR TO REMAIN. PROTECT IN PLACE.
7. EXISTING WINDOW TO REMAIN. PROTECT IN PLACE.
8. OUTSIDE LIMITS OF WORK. EXISTING PARKING, DRIVE AISLES, PEDESTRIAN WALKWAYS AND PARKING LOT LIGHTS TO REMAIN.
9. EXISTING SCE TRANSFORMER TO REMAIN.
10. LIMIT OF WORK FOR THIS PERMIT SHOWN BY DASHED LINE.
11. EXISTING WALKWAY TO BE DEMOLISHED.
12. EXISTING LANDSCAPE. PROTECT IN PLACE.
13. EXISTING CONCRETE PAVING. PROTECT IN PLACE.
14. EXISTING GRADED PAD.
15. WALKWAY TO BE 4'-0" WIDE FOR ACCESSIBLE PATH OF TRAVEL. CONTRACTOR TO CONFIRM EXISTING WIDTH AND INSTALL CONCRETE PAVERS ALONG SIDE OF WALKWAY WHERE ADDITIONAL PAVING IS REQUIRED TO PROVIDE 4'-0" WIDTH.
16. DEMOLISH AC PAVING AS REQUIRED FOR PROPOSED TRASH ENCLOSURE.

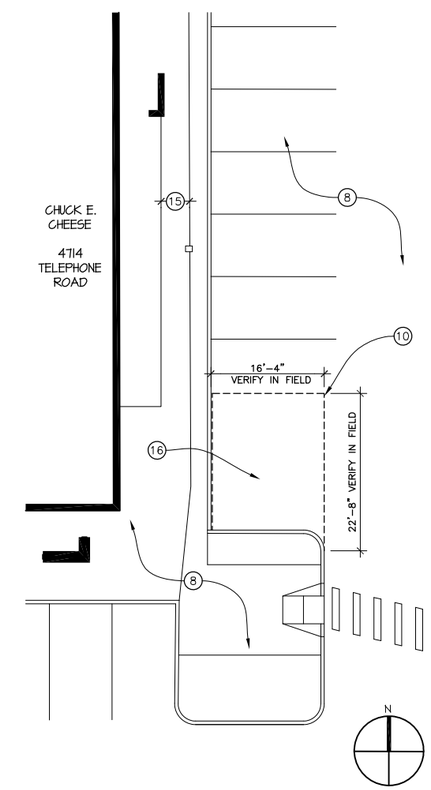

1 PARTIAL DEMO SITE PLAN EAST SIDE OF CHUCK E. CHEESE'S

SCALE 1" : 10'-0"

RASMUSSEN & ASSOCIATES
Architecture
Planning
Interiors
21 S. California Street
Fourth Floor
Ventura, California 93001
(805) 648-1234

LICENSED ARCHITECT LARS RASMUSSEN C-4848 REN. 9-30-18 STATE OF CALIFORNIA

2018-01-16 PRELIMINARY SET
NOT FOR CONSTRUCTION

Sheet Title: PARTIAL DEMO SITE PLAN

Revisions	
R&A No:	A161305
Date:	10/18/17
Drawn:	L.T.
Checked:	J.J.L.
Consult. No:	

RIVERA SHOPPING CENTER
STARBUCKS COFFEE HOUSE
4710 TELEPHONE ROAD
VENTURA, CALIFORNIA 93003

Sheet No.
A1.2

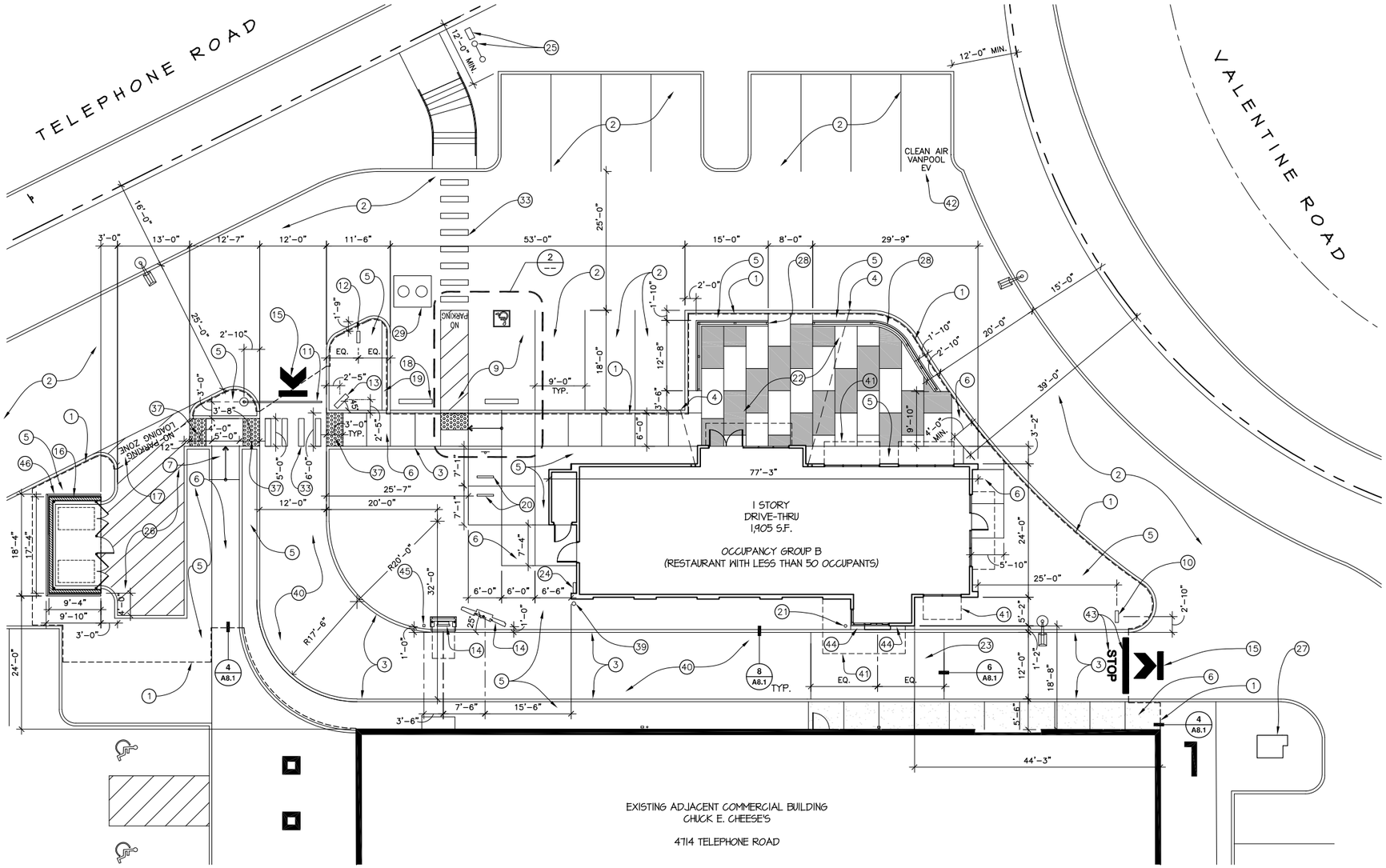

PROPOSED PARTIAL SITE PLAN

SCALE 1" : 10'-0"

0 5 10 15 20 25 50

GENERAL NOTES

A. CONTRACTOR TO BID AN ALLOWANCE ON CONCRETE FOOTINGS FOR SIGNAGE AND SQUARE PIPE BOLLARD (SEE NOTES #10–14 AND #45). FOOTINGS PER STARBUCKS SHOP DRAWINGS. NOT A PART OF THIS PERMIT.

B. CONTRACTOR SHALL VERIFY EXACT LOCATION OF SIGNAGE AND ALL DRIVE–THRU EQUIPMENT WITH STARBUCKS PRIOR TO INSTALLATION.

NOTE LEGEND

1. LIMIT OF WORK FOR THIS PERMIT.
2. EXISTING PARKING AREA OF AC PAVING AND 6" CONCRETE CURB TO REMAIN.
3. 6" CONCRETE CURB, TYPICAL. SEE DETAIL 8/A8.1
4. ROOF DRAIN DAYLIGHTS AT CURB FACE.
5. LANDSCAPE AREA. SEE LANDSCAPING DRAWINGS.
6. CONCRETE PAVED WALKWAY. 4" THICK PAVING WITH SCORE LINES AS SHOWN. SEE DETAIL 5/A8.1. ACCESSIBLE PATH FOR CHUCK E. CHEESE'S 5% MAX. SLOPE, 2% MAX. CROSS SLOPE. SEE NOTE #4 ON CIVIL SHEET 'C1'.
7. PERPENDICULAR CURB RAMP WITH DETECTABLE WARNING, 1:12 SLOPE. SEE DETAIL 2/A8.1
8. PARALLEL CURB RAMP WITH DETECTABLE WARNING. SEE DETAIL 1/A8.1.
9. EXISTING ACCESSIBLE VAN PARKING SPACE WITH LOADING AISLE AND SIGNS. SEE DETAIL 2 ON THIS SHEET.
10. "NO ENTRY" SIGN BY TENANT, UNDER SEPARATE SUBMITTAL AND PERMIT.
11. VERTICAL CLEARANCE BAR BY TENANT, UNDER SEPARATE SUBMITTAL AND PERMIT.
12. TENANT DRIVE–THRU TURN SIGN, UNDER SEPARATE SUBMITTAL AND PERMIT.
13. TENANT MENU BOARD, UNDER SEPARATE SUBMITTAL AND PERMIT.
14. TENANT MENU AND ORDERING BOARDS, UNDER SEPARATE SUBMITTAL AND PERMIT.
15. DIRECTIONAL ARROW PAINTED ON AC PAVING PER STARBUCKS STANDARDS.
16. TRASH ENCLOSURE. SEE SHEET A8.4
17. WHITE STRIPED NO PARKING LOADING ZONE. "NO PARKING LOADING ZONE" PAINTED IN WHITE, 8" HIGH LETTERS. SEE CIVIL DRAWINGS.
18. EXISTING CONCRETE WHEEL STOP.
19. 12" WIDE CAST–IN–PLACE CONCRETE WALK–OFF AREA.
20. (2) BIKE RACKS. SEE DETAIL 10/A8.1.
21. PIPE BOLLARD. SEE DETAIL 9/A8.1
22. DECORATIVE PAVERS. SEE SHEET L1.00.
23. BLACK 6" CONCRETE PAVING, 24'–0" LONG CENTERED AT DRIVE–THRU WINDOW. SEE NOTE #5 ON CIVIL SHEET 'C1'.
24. GAS METER. SEE PLUMBING SHEET P1.01.
25. BACKFLOW DEVICE AND WATER METER. SEE PLUMBING DRAWINGS.
26. 4" THICK CONCRETE PAVING.
27. EXISTING ELECTRICAL EQUIPMENT TO REMAIN. SEE ELECTRICAL DRAWINGS.
28. 3'–0" HIGH WOOD SLAT PATIO SCREEN FENCE ON CONCRETE CURB. SEE DETAIL 11/A8.1.
29. GREASE INTERCEPTOR ACCESS MANHOLES. SEE PLUMBING SHEET P0.01.
30. 4" THICK CONCRETE APRON. CONSTRUCT OVER 4" OF SAND WITH CONCRETE COMPRESSIVE STRENGTH ≥ 2500 PSI, WITH #3 BARS @ 24" O.C. ALIGN WITH CURB FACE.
31. RE–STRIPE PARKING STALL PER CITY OF VENTURA STANDARDS.
32. FILL IN GAP BETWEEN CMU WALL AND CURB WITH CONCRETE.
33. CROSSWALK STRIPING. SEE NOTE #18 ON CIVIL SHEET 'C1'.
34. EXISTING 3'–0" SQUARE INTERNATIONAL ACCESSIBLE SYMBOL, PAINTED WHITE STENCIL OVER BLUE PAINTED BACKGROUND.
35. EXISTING PAINTED ACCESS AISLE TO REMAIN. VERIFY STRIPING COLOR IS BLUE.
36. EXISTING "NO PARKING" PAINTED IN WHITE, 12" HIGH LETTERS.
37. 36" WIDE X WIDTH OF WALK DETECTABLE WARNING TRUNCATED DOMES, ARMOR–TILE "WET SET" PANELS OR APPROVED EQUIVALENT. COLOR "FEDERAL YELLOW" #33538.
38. ACCESSIBLE STALL PARKING SIGN, SEE DETAIL 3/A8.1
39. FIRE RISER
40. AC PAVING. SEE CIVIL DRAWINGS.
41. LINE OF AWNING ABOVE, TYPICAL.
42. DESIGNATED PARKING SPACE PER CALIFORNIA GREEN BUILDING STANDARDS CODE. STENCIL 12" HIGH WHITE LETTERS "CLEAN AIR VANPOOL EV".
43. WHITE TRAFFIC PAINT.
44. FILL 8" GAP BETWEEN BUILDING AND CURB WITH CONCRETE PAVING.
45. SQUARE BOLLARD PER STARBUCKS STANDARDS.
46. GREEN SCREEN. SEE TRASH ENCLOSURE DETAILS ON SHEET A8.4.

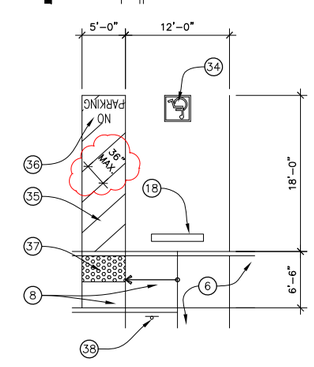

2 VAN PARKING STALL DETAIL

SCALE 1/8" : 1'-0"

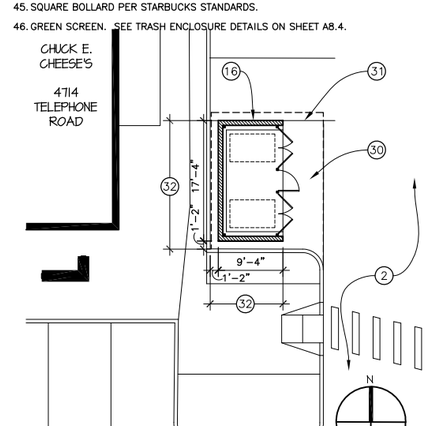

1 PARTIAL SITE PLAN EAST SIDE OF CHUCK E. CHEESE'S

SCALE 1" : 10'-0"

RASMUSSEN & ASSOCIATES
Architecture
Planning
Interiors
2018-01-16 PRELIMINARY SET
NOT FOR CONSTRUCTION
21 S. California Street
Fourth Floor
Ventura, California 93001
(805) 648-1234
LICENSED ARCHITECT LARRY RASMUSSEN C-4848 REN. 9-30-18 STATE OF CALIFORNIA

Sheet Title: PARTIAL SITE PLAN

Revisions	
1/16/18 P.C.CORR.	

R&A No: A161305
Date: 10/18/17
Drawn: L.T.
Checked: J.J.L.
Consult. No:

RIVIERA SHOPPING CENTER
STARBUCKS COFFEE HOUSE
4710 TELEPHONE ROAD
VENTURA, CALIFORNIA 93003

Sheet No.
A1.3

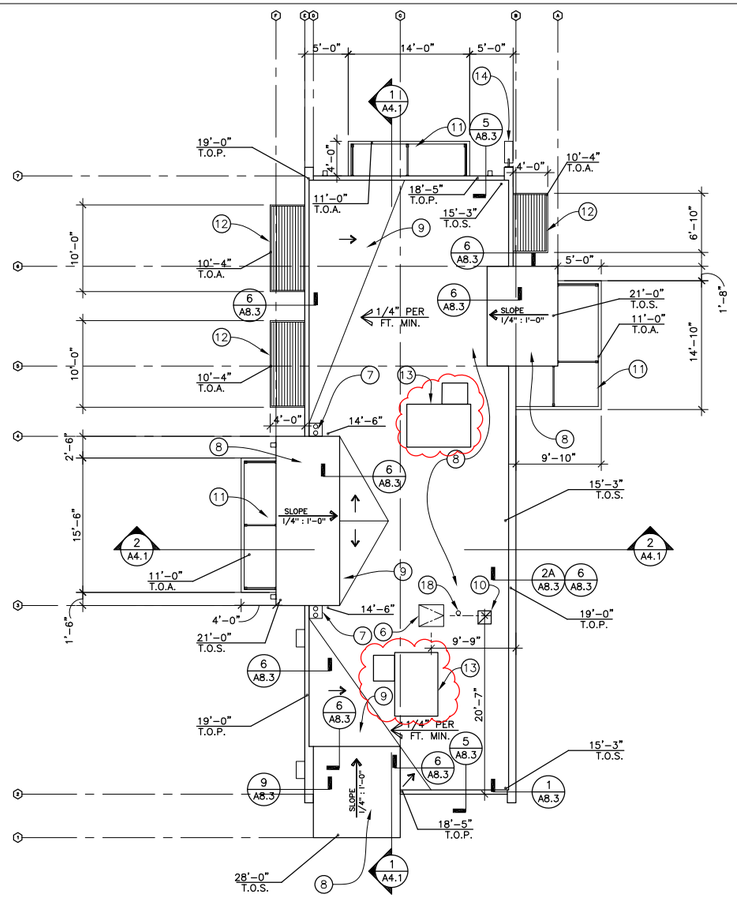

ROOF PLAN

SCALE 1/8" : 1'-0"

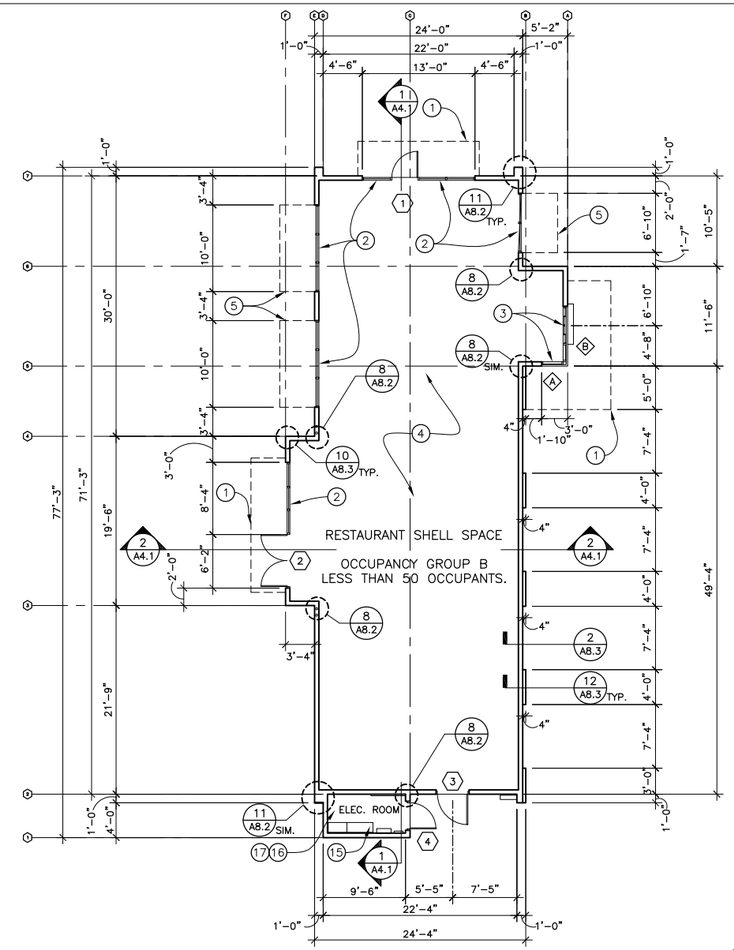

FLOOR PLAN

SCALE 1/8" : 1'-0"

NOTE LEGEND

1. SOLID AWNING ABOVE. SEE NOTE #11 THIS SHEET.
2. 2" x 4 1/2" ALUMINUM STOREFRONT. SEE DETAILS 1,2, & 4/A8.2
3. DRIVE THROUGH WINDOW AND TRANSACTION COUNTER.
4. 4" CONCRETE FLOOR SLAB. SEE STRUCTURAL DRAWINGS.
5. LOUVERED AWNING ABOVE. SEE NOTE #12 THIS SHEET.
6. 36" X 30" ROOF ACCESS HATCH. LADDER UNDER SEPARATE TENANT IMPROVEMENT PERMIT. CONFIRM LOCATION OF LADDER WITH TENANT IMPROVEMENT DRAWINGS PRIOR TO INSTALLATION OF ROOF ACCESS HATCH.
7. ROOF DRAIN AND OVERFLOW DRAIN WITH 2" SUMP. SEE DETAIL 7/A8.3.
8. FOUR-PLY BUILT-UP ROOFING SYSTEM OVER PLYWOOD SHEATHING. "JOHNS MANVILLE, 4GNC CR, CLASS A, FM 1-90" UL 790, REPORT #TGFU.R10167. PROVIDE A "COOL ROOF" WHITE FINISH. SEE STRUCTURAL AND MECHANICAL DRAWINGS.
9. PLYWOOD CRICKET WITH ROOFING FINISH.
10. EXHAUST FAN. SEE MECHANICAL DRAWINGS. CONTRACTOR SHALL COORDINATE LOCATION WITH TENANT IMPROVEMENT DRAWINGS PRIOR TO INSTALLATION.
11. SOLID CANOPY WITH 12" DEEP SMOOTH FASCIA AND ROLL FORMED ALUMINUM DECK, BY BEAGLE ONE, INC. SEE DETAIL 9/A8.2 AND STRUCTURAL DRAWING FOR ATTACHMENT DETAIL.
12. SLOPED, LOUVERED AWNING BY BEAGLE ONE, INC. SEE DETAIL 10/A8.2 AND STRUCTURAL DRAWINGS FOR ATTACHMENT DETAIL.
13. MECHANICAL EQUIPMENT PER MECHANICAL SHEETS.
14. WALL MOUNTED SIGN PER SEPARATE PERMIT.
15. ELECTRICAL EQUIPMENT. SEE SITE PLAN AND ELECTRICAL DRAWINGS.
16. ELECTRICAL ROOM FINISH TO BE 5/8" FULL HEIGHT GYPSUM BOARD TAPED AND PAINTED AT INTERIOR WALLS. SEMIGLOSS PAINT FINISH. AT CEILING, FINISH SHALL BE 5/8" GYPSUM BOARD, TAPED AND PAINTED. SEMIGLOSS PAINT FINISH.
17. 2x8 ROOF JOISTS AT ELECTRICAL ROOM. HEIGHT AND SLOPE TO MATCH ADJACENT ROOF STRUCTURE. SEE SECTION 1/A4.1 AND STRUCTURAL DRAWINGS.
18. PLUMBING VENT. SEE MECHANICAL AND PLUMBING DRAWINGS. CONTRACTOR SHALL COORDINATE LOCATION WITH TENANT IMPROVEMENT DRAWINGS PRIOR TO INSTALLATION.

DOOR SCHEDULE

DOOR NO.	TYPE	SIZE WIDTH	SIZE HEIGHT	FINISH	DETAIL HEAD	DETAIL JAMB	DETAIL THRESHOLD	FRAME MATERIAL	FRAME FINISH	HARDWARE SET	LABEL	HARDWARE TYPE	CLOSER	SIGN	REMARKS
1	A	3'-0"	7'-0"	MFR	1/A8.2	1/A8.2	4/A8.2	AL	MFR	2*	N	*	Y	--	*SEE T.I. DOOR SCHEDULE
2	A	6'-0"	7'-0"	MFR	1/A8.2	1/A8.2	4/A8.2	AL	MFR	2(2)*	N	*	Y	--	*SEE T.I. DOOR SCHEDULE
3	B	3'-6"	7'-0"	S	7/A8.2	7/A8.2	3/A8.2	HM	P	12*	N	*	Y	--	*SEE T.I. DOOR SCHEDULE
4	B	3'-0"	7'-0"	S	7/A8.2	7/A8.2	3/A8.2	HM	P	12*	N	*	N	--	*SEE T.I. DOOR SCHEDULE

DOOR TYPES

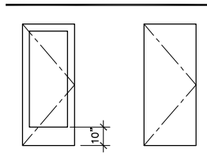

A — ALUMINUM STOREFRONT

B — HOLLOW METAL

DOOR SCHEDULE ABBREVIATIONS

AL	ALUMINUM	P	PAINT
HM	HOLLOW METAL	P/P	PUSH / PULL
L	LOCKSET	S	PAINT PROCESS "S" SEMI-GLOSS
MFR	MANUFACTURER'S STANDARD FINISH	Y	YES
N	OR NONE		

WINDOW TYPES

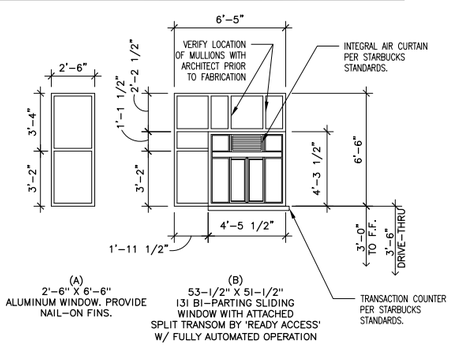

(A) 2'-6" X 6'-6" ALUMINUM WINDOW. PROVIDE NAIL-ON FINS.

(B) 53-1/2" X 51-1/2" 131 BI-PARTING SLIDING WINDOW WITH ATTACHED SPLIT TRANSOM BY 'READY ACCESS' W/ FULLY AUTOMATED OPERATION

CONCRETE SLAB NOTES

A. PROVIDE LEVEL REINFORCED, CONCRETE SLAB FLOOR AT GRADE STREET LEVEL. IN STABLE, DRY CONDITION. CONCRETE FLOOR MUST BE SMOOTH, LEVEL AND PROPERLY CURED, SEALED JOINTS AND READY TO ACCEPT TENANT'S FLOOR FINISHES.

B. ALL FLOORING MUST MEET APPLICABLE DEAD AND LIVE LOAD CODES, INCLUDING BUT NOT LIMITED TO ALL APPLICABLE BUILDING, STRUCTURAL AND ADA JURISDICTIONAL REQUIREMENTS. THE FLOOR STRUCTURE MUST HAVE LESS THAN 1/64" PER FOOT DEFLECTION IN ORDER TO ACCEPT TENANT'S FLOOR FINISHES.

GENERAL NOTES

A. WALLS ARE DIMENSIONED TO FACE OF STUD, U.N.O

B. LOCATE DOORS SO THAT DOUBLE JAMB STUDS AT HINGE SIDE ARE TIGHT TO ADJACENT WALL FRAMING; TYPICAL WHERE ADJACENT WALL OCCURS, U.N.O.

C. CONSULT WITH FIRE MARSHALL FOR PLACEMENT OF KNOX BOX PRIOR TO INSTALLATION AND CITY OF VENTURA SPECIFIC ORDERING FORM. RETAIN THE REFLECTIVE RED STICKER THAT ACCOMPANIES THE UNIT TO BE PLACED ON THE APPROPRIATE DOOR.

WALL LEGEND

2 x 6 WOOD STUD WALL WITH R-19 INSULATION. INTERIOR FINISH TO BE 5/8" TYPE 'X' GYPSUM BOARD FROM FLOOR TO UNDERSIDE OF ROOF DECK – LEVEL 4. ALL WALLS IN LINE WITH SHEAR PANEL SHALL BE FURRED OUT WITH 1/2" PLYWOOD TO MATCH THICKNESS.

ABBREVIATION LEGEND

T.O.A. = TOP OF AWNING

T.O.P. = TOP OF PARAPET

T.O.S. = TOP OF SHEATHING

RASMUSSEN & ASSOCIATES
Architecture
Planning
Interiors
21 S. California Street
Fourth Floor
Ventura, California 93001
(805) 648-1234

2018-01-16 PRELIMINARY SET
NOT FOR CONSTRUCTION

LICENSED ARCHITECT LANCE RASMUSSEN C-4848 REN. 9-30-18 STATE OF CALIFORNIA

Sheet Title: FLOOR AND ROOF PLANS

Revisions	
R&A No:	A161305
Date:	10/18/17
Drawn:	L.T.
Checked:	J.J.L.
Consult. No:	

1 10/16/18 P.C.CORR.

RIVIERA SHOPPING CENTER
STARBUCKS COFFEE HOUSE
4710 TELEPHONE ROAD
VENTURA, CALFORNIA 93003

Sheet No.
A2.1

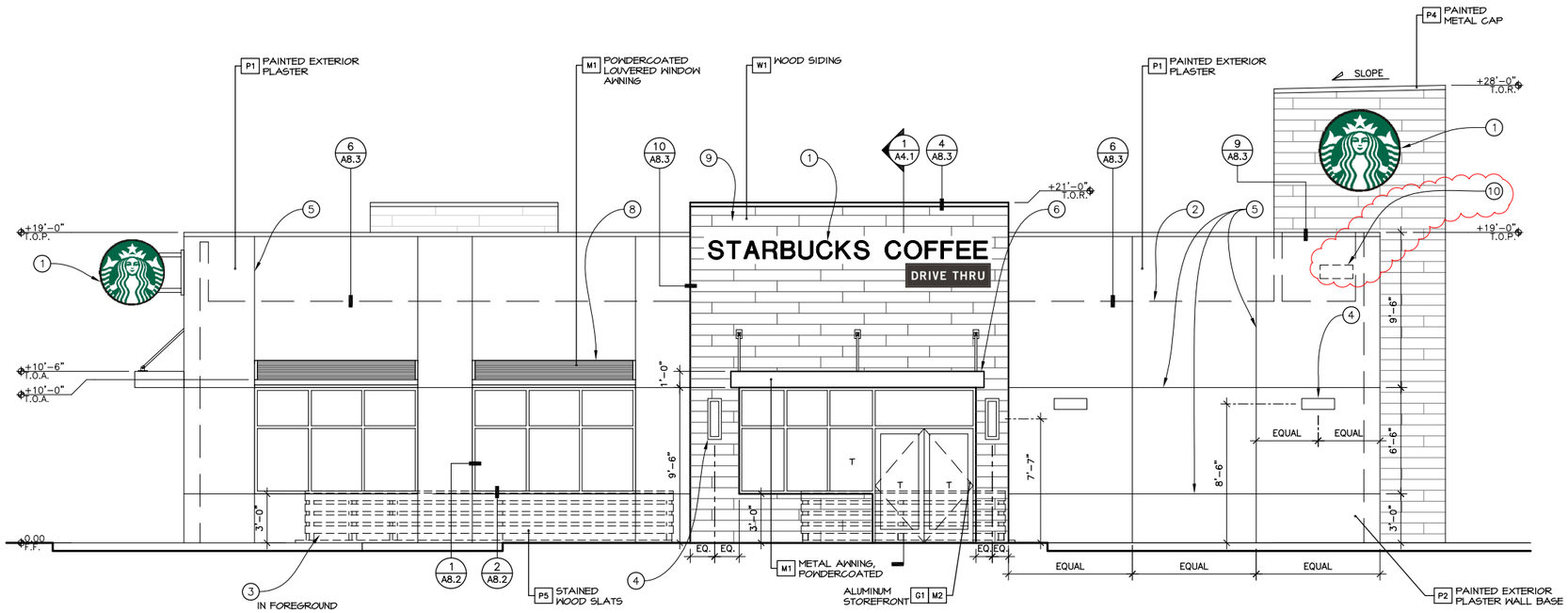

NORTH ELEVATION

SCALE 1/4" : 1'-0"

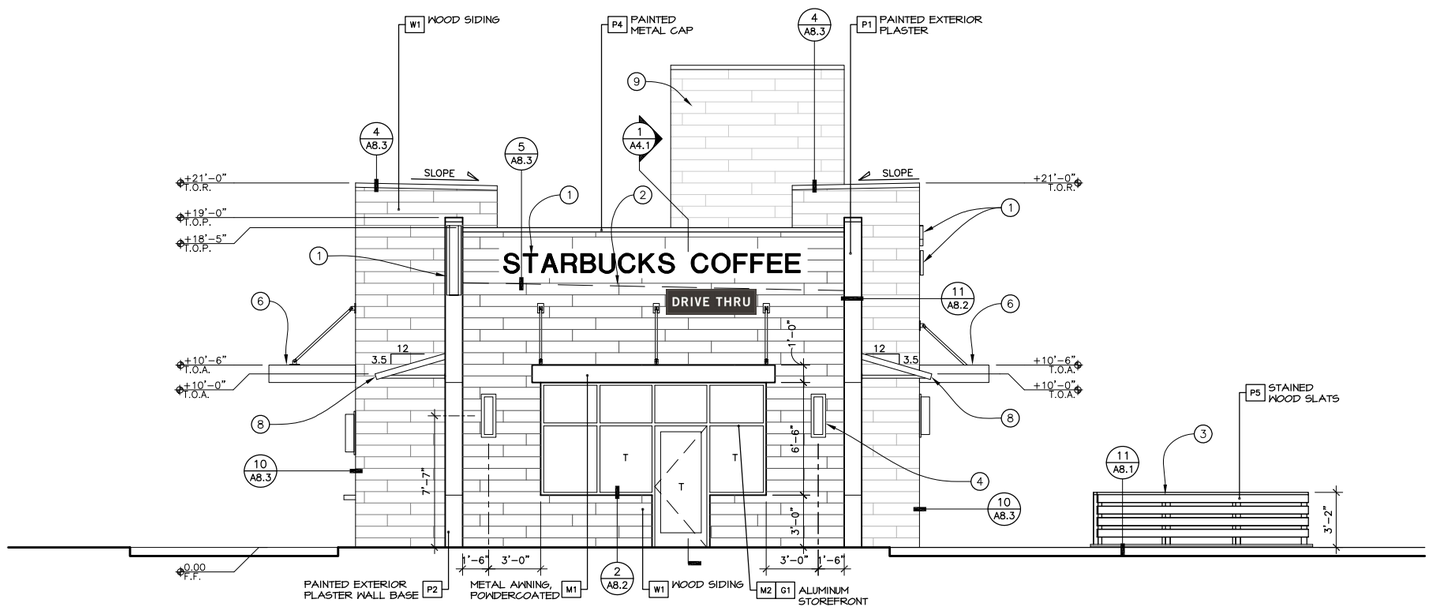

EAST ELEVATION

SCALE 1/4" : 1'-0"

NOTE LEGEND

1 ALL SIGNAGE UNDER SEPARATE PERMIT.

2 LINE OF ROOF BEYOND.

3 WOOD SLAT PATIO SCREEN. FINISH TO MATCH EXTERIOR WOOD SIDING. SEE 'COLOR/MATERIAL LEGEND' ON THIS SHEET AND DETAIL 11/A8.1.

4 LIGHT FIXTURE. LOCATE AS SHOWN, TYPICAL.

5 PLASTER SCORE LINES. FRY-REGLET 1/4" CHANNEL SCREED.

6 SOLID CANOPY WITH 12" DEEP SMOOTH FASCIA AND ROLL FORMED ALUMINUM DECK, BY BEAGLE ONE, INC. SEE DETAIL 9/A8.2 AND 10/S4.2 ON STRUCTURAL DRAWINGS.

7 NOT USED.

8 SLOPED, LOUVERED AWNING BY BEAGLE ONE, INC. SEE DETAIL 10/A8.2 AND 10/S4.2 ON STRUCTURAL DRAWINGS.

9 3/4" WOOD SIDING BY CENTENNIAL WOODS. 5" FACE DIMENSION.

10 LOCATION FOR ADDRESS NUMBERS, 4" HIGH MINIMUM.

COLOR / MATERIAL LEGEND

P1	PAINTED EXTERIOR PLASTER WALL FIELD 30-30 SAND FLOAT FINISH SHERWIN WILLIAMS; PACER WHITE, SW6098
P2	PAINTED EXTERIOR PLASTER WALL BASE AND INSET PANELS 30-30 SAND FLOAT FINISH SHERWIN WILLIAMS; TONY TAUPE, SW7038
P3	PAINTED METAL – AT TRASH ENCLOSURE SHERWIN WILLIAMS; BLACK MAGIC, SW6991
P4	PAINTED METAL CAP, CORNER TRIM SHERWIN WILLIAMS; GAUNTLET GRAY, SW7019
P5	STAINED WOOD SLATS SEMITRANSPARENT STAIN BY 'OLYMPIC', BLACK OAK COLOR
W1	EXTERIOR WOOD SIDING CENTENNIAL WOODS; LARAMIE, 5" FACE.
M1	METAL AWNING POWDERCOAT TIGER DRYLAC 338/70191
M2	ALUMINUM STOREFRONT KAWNEER; CLASSIC BRONZE
G1	GLASS; CLEAR T = TEMPERED GLAZING

ABBREVIATION LEGEND

T.O.A. = TOP OF AWNING

T.O.P. = TOP OF PARAPET

T.O.R. = TOP OF ROOF

RASMUSSEN & ASSOCIATES
Architecture
Planning
Interiors
2018-01-16 PRELIMINARY SET
NOT FOR CONSTRUCTION
21 S. California Street
Fourth Floor
Ventura, California 93001
(805) 648-1234
LICENSED ARCHITECT LARS RASMUSSEN C-4848 REN. 9-30-18 STATE OF CALIFORNIA

Sheet Title: EXTERIOR ELEVATIONS

Revisions	
R&A No:	A161305
Date:	10/18/17
Drawn:	L.T.
Checked:	J.J.L.
Consult. No:	

1 7/16/18 P.C.CORR.

RIVIERA SHOPPING CENTER
STARBUCKS COFFEE HOUSE
4710 TELEPHONE ROAD
VENTURA, CALIFORNIA 93003

Sheet No.
A3.1

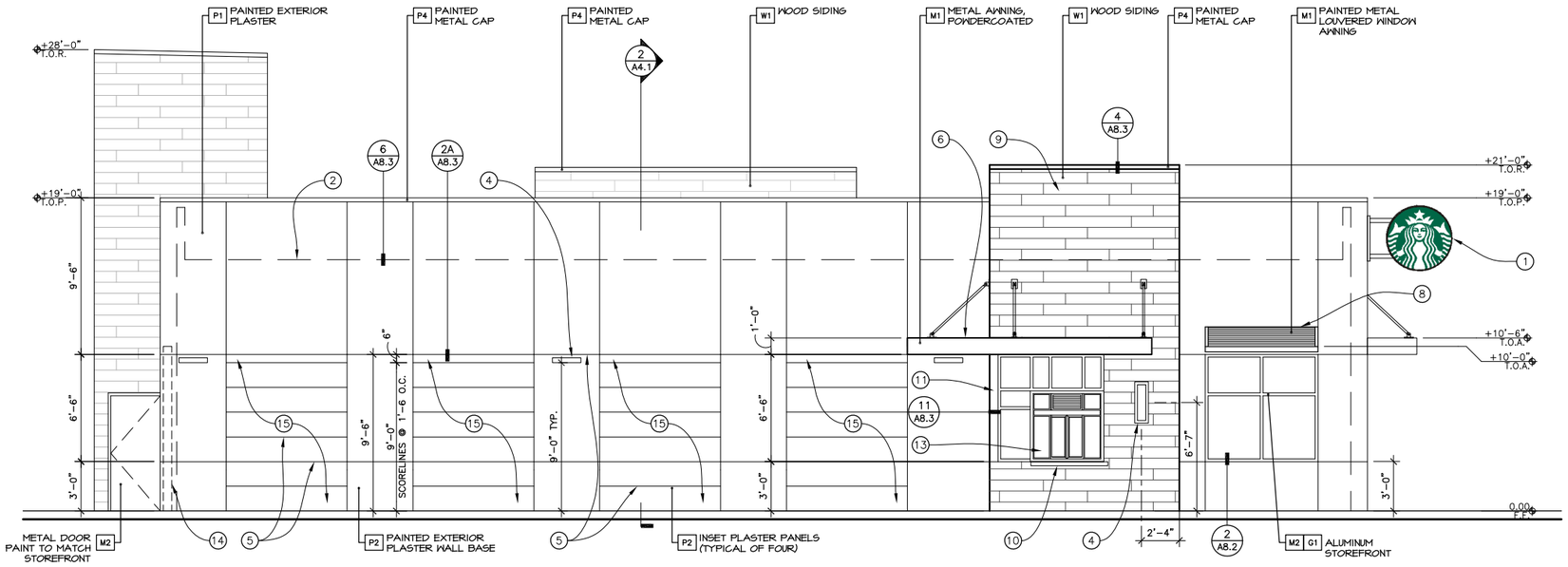

SOUTH ELEVATION

SCALE 1/4" : 1'-0"

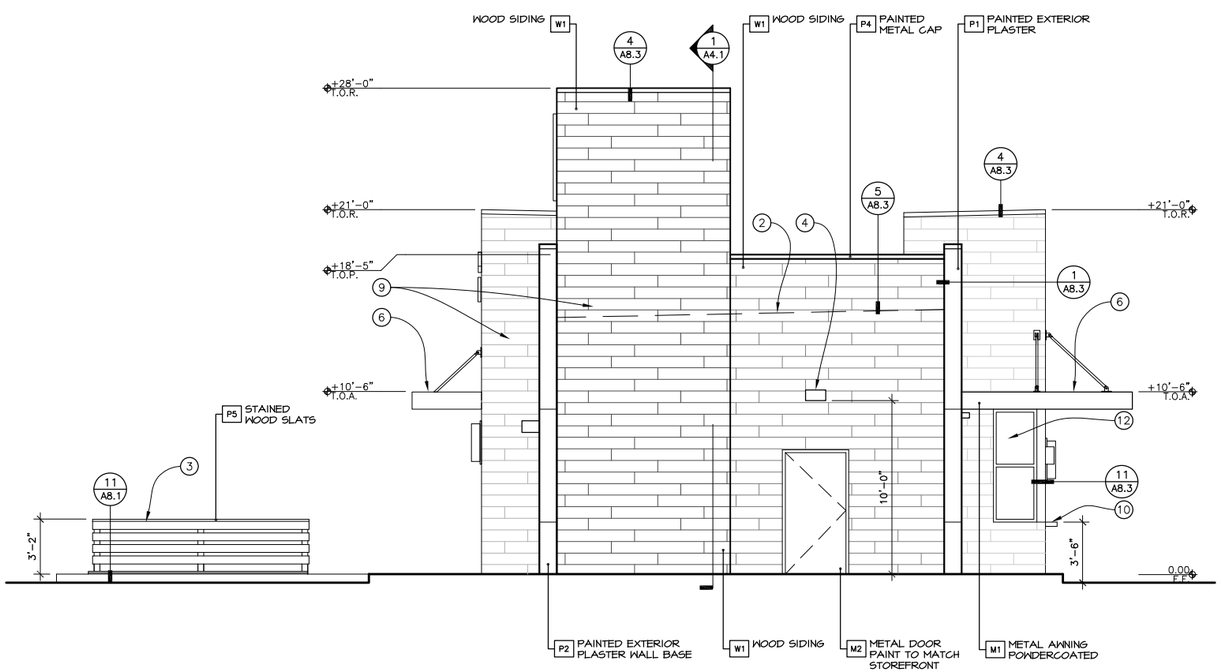

WEST ELEVATION

SCALE 1/4" : 1'-0"

NOTE LEGEND

1. ALL SIGNAGE UNDER SEPARATE PERMIT.
2. LINE OF ROOF BEYOND.
3. WOOD SLAT PATIO SCREEN. FINISH TO MATCH EXTERIOR WOOD SIDING. SEE 'COLOR/MATERIAL LEGEND' ON THIS SHEET AND DETAIL 11/A8.1.
4. LIGHT FIXTURE. LOCATE AS SHOWN, TYPICAL.
5. PLASTER SCORE LINES. FRY–REGLET 1/4" CHANNEL SCREED.
6. SOLID CANOPY WITH 12" DEEP SMOOTH FASCIA AND ROLL FORMED ALUMINUM DECK, BY BEAGLE ONE, INC. SEE DETAIL 9/A8.2 AND STRUCTURAL DRAWING FOR ATTACHMENT DETAIL.
7. RECESSED PLASTERED PANEL. SEE DETAIL 2/A8.3.
8. SLOPED, LOUVERED AWNING BY BEAGLE ONE, INC. SEE DETAIL 10/A8.2 AND STRUCTURAL DRAWINGS FOR ATTACHMENT DETAIL.
9. 3/4" WOOD SIDING BY CENTENNIAL WOODS. 5" FACE DIMENSION.
10. DRIVE–THRU HAND–OFF SHELF WITH BRACKETS, 56" X 10". PANELTECH INTERNATIONAL "PTI–DTS".
11. ALUMINUM CLADDING TO MATCH STOREFRONT.
12. 2'–6" x 6'–6" ALUMINUM WINDOW. SEE WINDOW TYPES ON SHEET A2.1.
13. DRIVE–THRU WINDOW AND TRANSOM. SEE WINDOW TYPES ON SHEET A2.1.
14. DASHED LINE INDICATES LOCATION OF FIRE SPRINKLER RISER. SEE PLUMBING SHEET P1.01.
15. WALL RECESSED 3–1/2" AT SCORED PANELS. SEE DETAIL 2/A8.3.

COLOR / MATERIAL LEGEND

P1	PAINTED EXTERIOR PLASTER WALL FIELD 30–30 SAND FLOAT FINISH SHERWIN WILLIAMS; PACER WHITE, SW6098
P2	PAINTED EXTERIOR PLASTER WALL BASE AND INSET PANELS 30–30 SAND FLOAT FINISH SHERWIN WILLIAMS; TONY TAUPE, SW7038
P3	PAINTED METAL – AT TRASH ENCLOSURE SHERWIN WILLIAMS; BLACK MAGIC, SW6991
P4	PAINTED METAL CAP, CORNER TRIM SHERWIN WILLIAMS; GAUNTLET GRAY, SW7019
P5	STAINED WOOD SLATS SEMITRANSPARENT STAIN BY 'OLYMPIC', BLACK OAK COLOR
W1	EXTERIOR WOOD SIDING CENTENNIAL WOODS; LARAMIE, 5" FACE.
M1	METAL AWNING POWDERCOAT TIGER DRYLAC 338/70191
M2	ALUMINUM STOREFRONT KAWNEER; CLASSIC BRONZE
G1	GLASS; CLEAR T = TEMPERED GLAZING

ABBREVIATION LEGEND

T.O.A.	=	TOP OF AWNING
T.O.P.	=	TOP OF PARAPET
T.O.R.	=	TOP OF ROOF

GENERAL FINISH DOOR & ACCESSIBILITY NOTES

1. DOORS:
   - A. ALL DOOR AND LATCHES SHALL BE LEVER TYPE AND SHALL BE LOCATED 34"–44" ABOVE FINISH FLOOR.
   - B. DOOR HARDWARE SHALL NOT REQUIRE MORE THAN 5 LBS. OF PRESSURE TO OPERATE EXTERIOR DOOR AND NO MORE THAN 5 LBS. OF PRESSURE TO OPERATE INTERIOR DOORS. FIRE RATED DOORS MAY REQUIRE 15 LBS. OF PRESSURE TO OPERATE. PRESSURE TO OPERATE DOORS SHALL BE MEASURED AT RIGHT ANGLES TO THE HINGED DOORS.
   - C. THRESHOLDS MAY NOT BE MORE THAN 1/2" HIGH AND EXPOSED EDGES SHALL BE BEVELED, WITH A SLOPE NO GREATER THAN 45 DEGREES. MAXIMUM ALLOWED SINGLE VERTICAL CHANGE IN ELEVATION SHALL BE 1/4".
   - D. ALL EXIT DOORS SHALL BE OPERABLE FROM THE INSIDE WITHOUT THE USE OF A KEY OR ANY SPECIAL KNOWLEDGE OR EFFORT.
   - E. THE BOTTOM 10" OF ALL DOORS AND GATES SHALL HAVE A SMOOTH, UNINTERRUPTED SURFACE TO ALLOW THE DOOR OR GATE TO BE OPENED BY A WHEEL CHAIR FOOTREST WITHOUT CREATING A TRAP HAZARDOUS CONDITION. WHERE NARROW FRAME DOORS ARE USED, A 10" HIGH SMOOTH PANEL SHALL BE INSTALLED ON THE PUSH SIDE OF THE DOOR, WHICH WILL ALLOW THE DOOR TO BE OPENED BY A WHEEL CHAIR FOOTREST WITHOUT CREATING A TRAP HAZARDOUS CONDITION. EXCEPTION FOR SLIDING DOORS.
   - F. ALL FIRE DOOR ASSEMBLIES SHALL BE LABELED BY AN APPROVED AGENCY. THE LABELS SHALL COMPLY WITH NFPA 80, AND SHALL BE PERMANENTLY AFFIXED TO THE DOOR.
   - G. WHERE DOOR SWINGS OVER THE LANDINGS, LANDING DEPTH SHALL BE 60" MEASURED AT RIGHT ANGLES TO THE PLANE OF THE DOOR IN ITS CLOSED POSITION AND THE WIDTH OF LEVEL AREA SHALL EXTEND 24" PAST THE STRIKE EDGE OF THE EXTERIOR DOOR AND 18" PAST THE STRIKE EDGE OF THE INTERIOR DOOR.

     WHERE DOOR DOES NOT SWING OVER THE LANDINGS, LANDING DEPTH SHALL BE 58" MEASURED AT RIGHT ANGLES TO THE PLANE OF THE DOOR IN ITS CLOSED POSITION.
   - H. CLOSERS: ADJUST CLOSERS SO THAT CLOSING SPEED FROM 90° OPEN TO 12° FROM LATCH IS 5 SECONDS MINIMUM.
2. WALL, FLOOR AND CEILING MATERIALS SHALL NOT EXCEED THE FLAME SPREAD CLASSIFICATIONS IN C.B.C. 803.5.
3. EACH EXIT ACCESS FROM AN INTERIOR ROOM OR AREA TO A CORRIDOR OR HALLWAY THAT IS REQUIRED TO HAVE A VISUAL EXIT SIGN, SHALL BE IDENTIFIED BY A TACTILE EXIT SIGN WITH THE WORDS. "EXIT ROUTE" PER C.B.C. 1011.3 &11B–703. TACTILE (RAISED CHARACTERS AND BRAILLE) EXIT SIGNS ARE PLACED ON THE WALL ADJACENT TO THE LATCH SIDE. TACTILE CHARACTERS ON SIGNS SHALL BE LOCATED 48 INCHES MINIMUM ABOVE THE FINISH FLOOR OR GROUND SURFACE, MEASURED FROM THE BASELINE OF THE LOWEST BRAILLE CELLS AND 60 INCHES MAXIMUM ABOVE THE FINISH FLOOR OR GROUND SURFACE MEASURED FROM THE BASE LINE OF THE HIGHEST LINE OF RAISED CHARACTERS.
4. DOORS WITHIN THE ACCESSIBLE PATH OF TRAVEL:
   - A. ALL LATCHING AND LOCKING HAND ACTIVATED DOORS SHALL OPERATE WITH A SINGLE EFFORT WITHOUT REQUIRING THE ABILITY TO GRASP THE OPENING HARDWARE. LOCKED EXIT DOORS SHALL OPERATE AS ABOVE IN EGRESS DIRECTION.
   - B. DOOR SHALL BE OF A SIZE TO PERMIT INSTALLATION OF A DOOR NOT LESS THAN 3' IN WIDTH AND NOT LESS THAN 6'–8" IN HEIGHT.WHEN INSTALLED EXIT DOORS SHALL BE CAPABLE OF OPENING AT LEAST 90 DEGREES AND SHALL BE MOUNTED SO THAT THE CLEAR WIDTH OF THE EXIT DOOR IS NOT LESS THAN 32". MEASURED BETWEEN THE FACE OF THE DOOR AND THE OPPOSITES TOP. THE BOTTOM 10" OF DOORS SHALL BE A SMOOTH SURFACE.
9. GLAZING SHALL BE TEMPERED AS FOLLOWS:
   - A. GLAZING IN FIXED OR OPERABLE PANELS ADJACENT TO A DOOR WHERE THE NEAREST EXPOSED EDGE OF THE GLAZING IS WITHIN A 24" ARC OF EITHER VERTICAL EDGE OF THE DOOR IN A CLOSED POSITION AND WHERE THE BOTTOM EXPOSED EDGE OF THE GLAZING IS LESS THAN 60" ABOVE THE WALKING SURFACE.
   - B. GLAZING IN AN INDIVIDUAL FIXED OR OPERABLE PANEL, OTHER THAN THOSE LOCATIONS DESCRIBED IN ITEM A ABOVE, THAT MEETS ALL OF THE FOLLOWING.
     - 1B. EXPOSED AREA OF AN INDIVIDUAL PANE GREATER THAN 9 SQUARE FEET.
     - 2B. EXPOSED BOTTOM EDGE LESS THAN 18" ABOVE.
     - 3B. EXPOSED TOP EDGE GREATER THAN 36" ABOVE.
     - 4B. ONE OR MORE WALKING SURFACES WITHIN 36" HORIZONTALLY OF THE PLANE OF THE GLAZING.
10. ACCESSIBLE PATH OF TRAVEL.
   - A. MINIMUM 4'–0" WIDE. SLOPE NOT TO EXCEED 5% WITH 2% MAX. CROSS SLOPE. ALL SURFACES TO BE SLIP RESISTANT.

RASMUSSEN & ASSOCIATES
Architecture
Planning
Interiors
2018-01-16 PRELIMINARY SET
NOT FOR CONSTRUCTION
21 S. California Street
Fourth Floor
Ventura, California 93001
(805) 648-1234
LICENSED ARCHITECT LANCE RASMUSSEN C-4848 REN. 9-30-19 STATE OF CALIFORNIA

Sheet Title: FLOOR PLAN

Revisions	
R&A No:	A161305
Date:	10/18/17
Drawn:	L.T.
Checked:	J.J.L.
Consult. No:	

RIVIERA SHOPPING CENTER
STARBUCKS COFFEE HOUSE
4710 TELEPHONE ROAD
VENTURA, CALFORNIA 93003

Sheet No.
A3.2

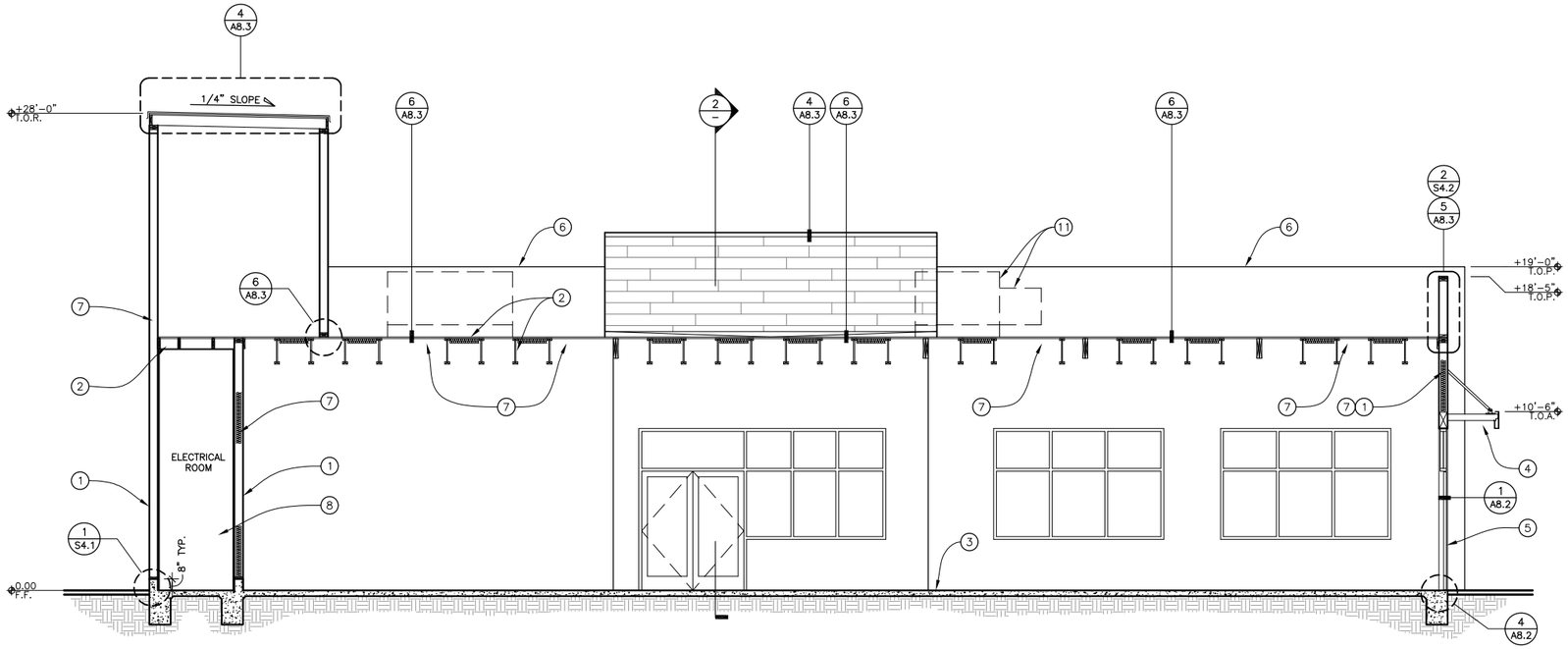

1 SECTION
SCALE 1/4" : 1'-0"

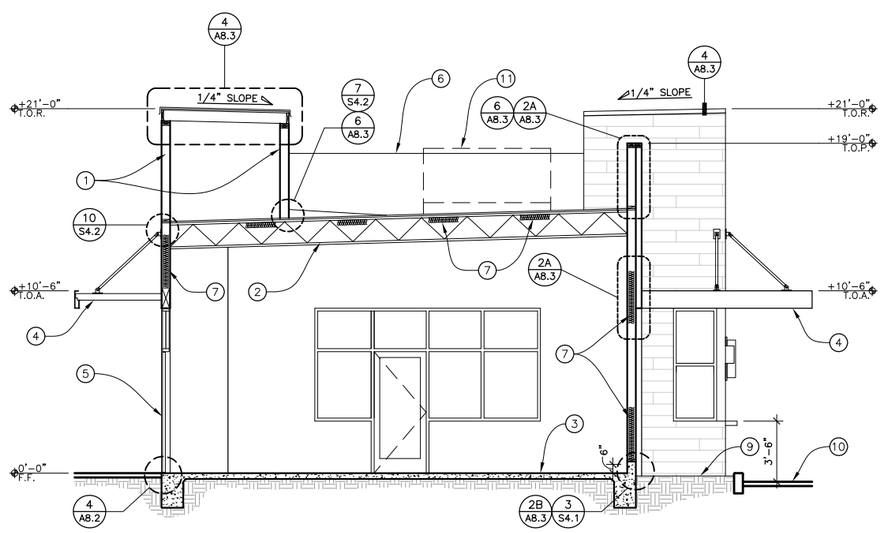

2 SECTION
SCALE 1/4" : 1'-0"

NOTE LEGEND

1. 2x6 WOOD STUDS @ 16" O.C.
2. ROOF FRAMING. SEE STRUCTURAL DRAWINGS.
3. CONCRETE SLAB FLOOR. SEE STRUCTURAL DRAWINGS.
4. SOLID CANOPY WITH 12" DEEP SMOOTH FASCIA AND ROLL FORMED ALUMINUM DECK, BY BEAGLE ONE, INC. SEE DETAIL 9/A8.2 AND STRUCTURAL DRAWING FOR ATTACHMENT DETAIL.
5. ALUMINUM STOREFRONT DOOR. SEE DOOR SCHEDULE.
6. PARAPET BEYOND. SEE DETAIL 6/A8.3 FOR EXTENT OF PLASTER AND FLASHING ON BACK SIDE PARAPETS.
7. PROVIDE R-19 INSULATION AT EVERY BAY OF ROOF AND WALLS. INSTALL PAINTABLE FACED BLACK SCRIM AT CEILING.
8. ELECTRICAL ROOM FINISH PER NOTE #16 OF SHEET A2.1.
9. LANDSCAPE. SEE SITE PLAN
10. AC PAVING WHERE OCCURS. SEE CIVIL DRAWINGS.
11. HVAC UNIT. SEE MECHANICAL DRAWINGS.

ABBREVIATION LEGEND

T.O.A.	=	TOP OF AWNING
T.O.P.	=	TOP OF PARAPET
T.O.R.	=	TOP OF ROOF

RASMUSSEN & ASSOCIATES
Architecture
Planning
Interiors
2018-01-16 PRELIMINARY SET
NOT FOR CONSTRUCTION
21 S. California Street
Fourth Floor
Ventura, California 93001
(805) 648-1234
LICENSED ARCHITECT LARS RASMUSSEN C-4848 REN. 9-30-2017 STATE OF CALIFORNIA

Revisions	
R&A No:	A161305
Date:	10/18/17
Drawn:	L.T.
Checked:	J.J.L.
Consult. No:	

Sheet Title: SECTIONS

RIVIERA SHOPPING CENTER
STARBUCKS COFFEE HOUSE
4710 TELEPHONE ROAD
VENTURA, CALIFORNIA 93003

Sheet No.
A4.1

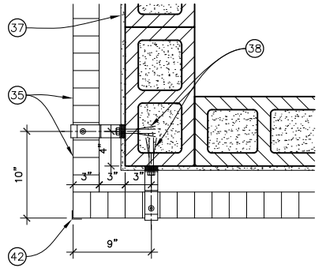

13 GREEN SCREEN - CORNER DET.
SCALE 1-1/2" : 1'-0"

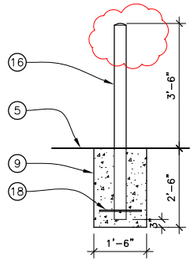

9 STEEL PIPE BOLLARD
SCALE 1/2" : 1'-0"

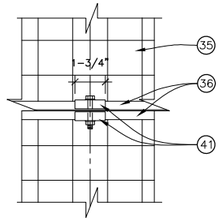

A ELEVATION

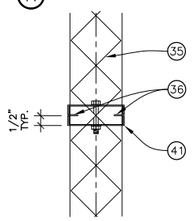

B VERTICAL SECTION

NOTE: ONLY TO BE USED @ VERTICAL SEAMS OF LARGE DIA. COLUMN TRELLIS UNITS & @ HORIZONTAL SEAMS @ FREESTANDING FENCES AND SCREENS

14 GREEN SCREEN "C" CLIP - PANEL TO PANEL
SCALE 3" : 1'-0"

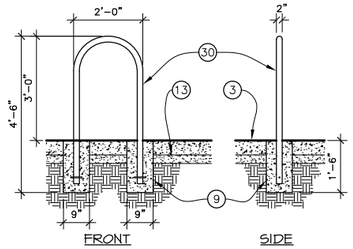

10 BIKE RACK
SCALE 1/2" : 1'-0"

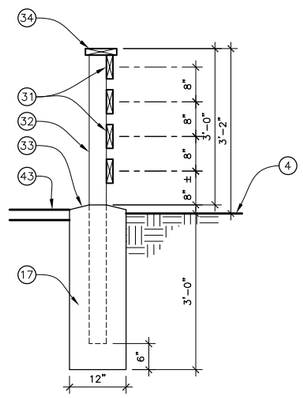

11 WOOD SLAT SCREEN ON CONCRETE CURB
SCALE 3/4" : 1'-0"

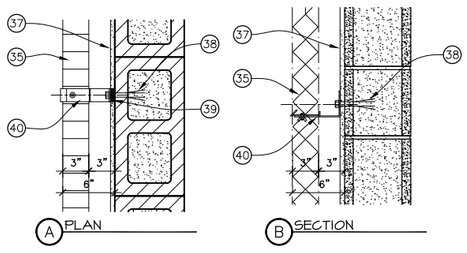

A PLAN B SECTION

12 GREEN SCREEN - MOUNTING CLIP @ CONCRETE BLOCK WALL
SCALE 1-1/2" : 1'-0"

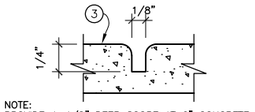

NOTE:
PROVIDE 1-1/2" DEEP SCORE AT 6" CONCRETE PAVING.

A SCORE JOINT
FULL SIZE

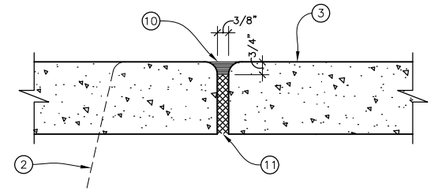

B EXPANSION JOINT

5 CONCRETE JOINTS
SCALE 3" : 1'-0"

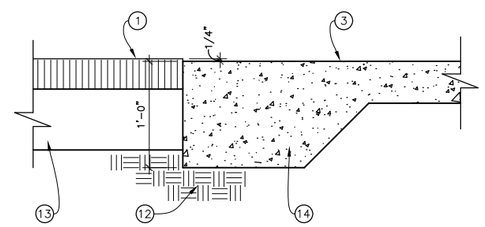

6 A.C. PAVING TO CONCRETE
SCALE 1-1/2" : 1'-0"

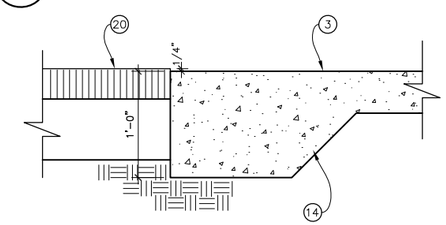

7 EXISTING A.C. PAVING TO CONCRETE
SCALE 1-1/2" : 1'-0"

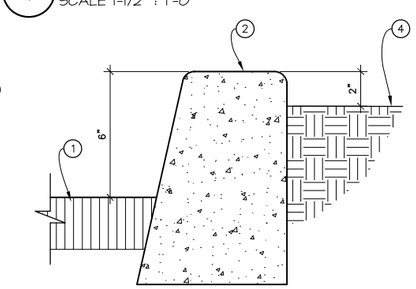

8 CURB/PLANTER
SCALE 3" : 1'-0"

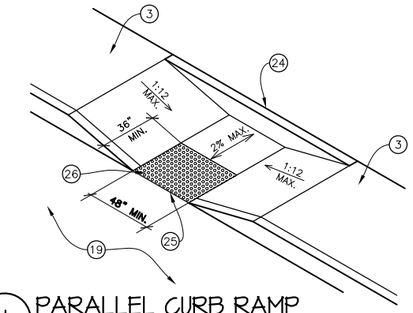

1 PARALLEL CURB RAMP
NOT TO SCALE

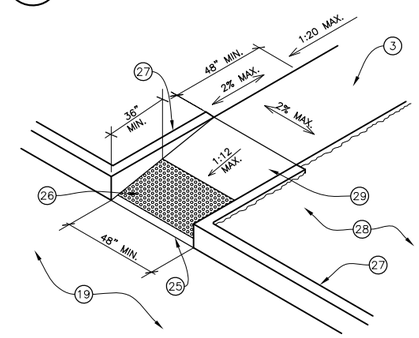

2 PERPENDICULAR CURB RAMP
NOT TO SCALE

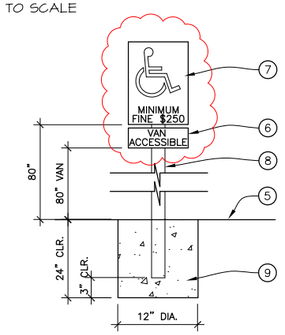

3 ACCESSIBLE STALL SIGN
NOT TO SCALE

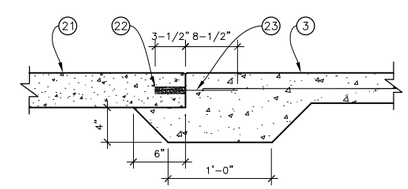

4 CONCRETE JOINT AT EXISTING PAVING
SCALE 1-1/2" : 1'-0"

NOTE LEGEND

1 A.C. PAVING OVER AGGREGATE BASE; SEE SITE PLAN.
2 CONCRETE CURB. SEE CIVIL DRAWINGS.
3 CONCRETE PAVING. SEE SITE PLAN AND CIVIL DRAWINGS FOR FINISH, THICKNESS, STEEL REINFORCEMENT.
4 LANDSCAPING. SEE SITE PLAN.
5 FINISH GRADE.
6 WHERE REQUIRED AT VAN SPACES, SEE SITE PLAN, PROVIDE ADDITIONAL ALUMINUM SIGN WITH 1" HIGH TEXT TO MATCH WIDTH AND COLOR OF SYMBOL SIGN.
7 9" x 9" ALUMINUM SIGN DISPLAYING INTERNATIONAL SYMBOL OF ACCESSIBILITY WITH BLUE PORCELAIN ENAMEL AND WHITE REFLECTIVE SYMBOLS AND LETTERS.
8 GALVANIZED "U" CHANNEL POST.
9 CONCRETE FOOTING AS NOTED.
10 POLYURETHANE BASED 2 PART ELASTOMERIC SEALANT.
11 PREFORMED JOINT FILLER
12 COMPACTED FILL.
13 CLASS II BASE.
14 THICKEN CONCRETE EDGE.
15 NOT USED.
16 6" STANDARD STEEL PIPE BOLLARD, PAINTED. FILL WITH CONCRETE AND DOME AS SHOWN.
17 2000 PSI CONCRETE
18 2 EACH #4 BARS, 1'-0" LONG, THROUGH PIPE EACH WAY.
19 ADJACENT PAVING; SEE SITE PLAN.
20 EXISTING AC PAVING TO REMAIN
21 EXISTING CONCRETE FLATWORK
22 DRILL & EPOXY GROUT DOWEL INTO EXISTING CONC.
23 #4 REBAR DOWEL AT 12" O.C. x 12 LONG".
24 6" WIDE CONCRETE CURB.
25 FLUSH JOINT BETWEEN PAVING SURFACES.
26 TRUNCATED DOMES. ON PERPENDICULAR CURB RAMPS, LOCATE TRUNCATED DOMES 6"-8" BACK FROM FACE OF CURB.
27 CONCRETE CURB WHERE OCCURS; SEE SITE PLAN.
28 LANDSCAPE OR CONCRETE PAVING WHERE OCCURS; SEE SITE PLAN.
29 AT RAMPS, PROVIDE COARSE BROOM FINISH.
30 2" METAL PIPE COATED WITH 12-20 MILS THICK PLASTISOL COATING
31 2X6 WOOD RAILING SAND BLAST CEDAR SLATS FACING PARKING LOT OR DRIVE-THRU. STAIN WITH SEMITRANSPARENT STAIN BY 'OLYMPIC', BLACK OAK COLOR. SUBMIT COLOR SAMPLE TO ARCHITECT PRIOR TO FABRICATION.
32 4X4 STEEL TUBE PAINTED TO MATCH RAILING.
33 SLOPE TOP OF CONCRETE 1/2".
34 2x8 WOOD CAP. FINISH TO MATCH CEDAR SLATS.
35 3" THICK GREENSCREEN PANEL, TYPICAL.
36 STEEL EDGE TRIM @ PANEL EDGES PER MANUFACTURER, TYPICAL.
37 EXTERIOR PLASTER FINISH
38 1/2" DIA. KWIK BOLT 3 EXPANSION ANCHOR @ 24" O.C. MAX. WITH 4" MINIMUM EMBEDMENT.
39 1/2" x 1-1/2" DIA. BLACK UHMW PLASTIC SPACER PER MANUFACTURER, TYPICAL.
40 MOUNTING CLIP PER MANUFACTURER, TYPICAL.
41 "C" CLIP WITH STAINLESS STEEL THRU BOLT, TYPICAL. CLIP SIZED FOR 1/4" FASTENER, TYPICAL.
42 TRIM PER MANUFACTURER @ OUTSIDE CORNER ONLY, TYPICAL.
43 CONCRETE PAVERS AT PATIO. SEE LANDSCAPE DRAWINGS.

RASMUSSEN & ASSOCIATES
Architecture
Planning
Interiors
21 S. California Street
Fourth Floor
Ventura, California 93001
(805) 648-1234

LICENSED ARCHITECT LANCE RASMUSSEN C-4848 REN. 9-30-18 STATE OF CALIFORNIA

2018-01-16 PRELIMINARY SET
NOT FOR CONSTRUCTION

Sheet Title: SITE DETAILS

Revisions	
1/16/18 P.C.CORR.	R&A No: A161305
	Date: 10/18/17
	Drawn: L.T.
	Checked: J.J.L.
	Consult. No:

RIVIERA SHOPPING CENTER
STARBUCKS COFFEE HOUSE
4710 TELEPHONE ROAD
VENTURA, CALIFORNIA 93003

Sheet No.
A8.1

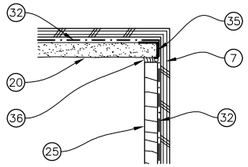

8 WOOD AT PLASTER CORNER - PLAN VIEW
SCALE 3" : 1'-0"

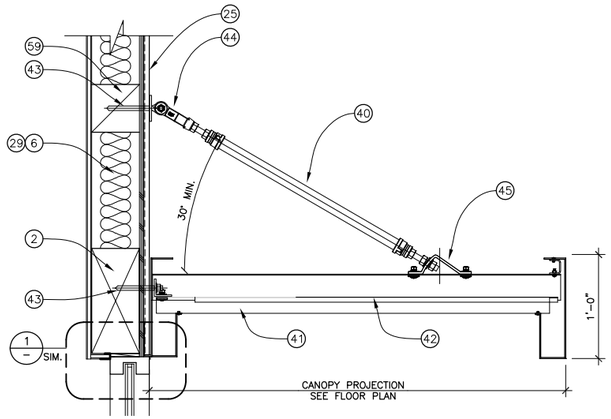

9 FLAT SOLID AWNING
SCALE 1-1/2" : 1'-0"

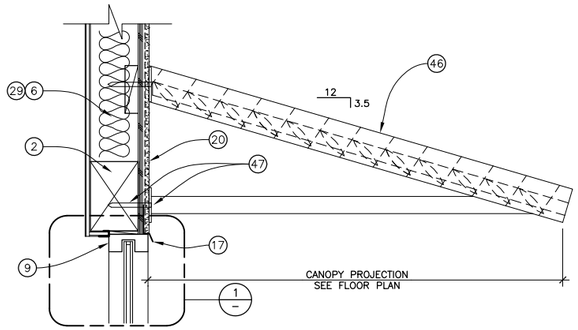

10 SLOPED LOUVER AWNING
SCALE 1-1/2" : 1'-0"

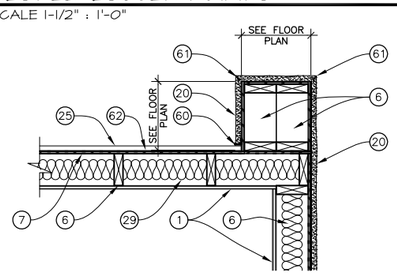

11 THICKENED WALL FRAMING - PLAN VIEW
SCALE 1" : 1'-0"

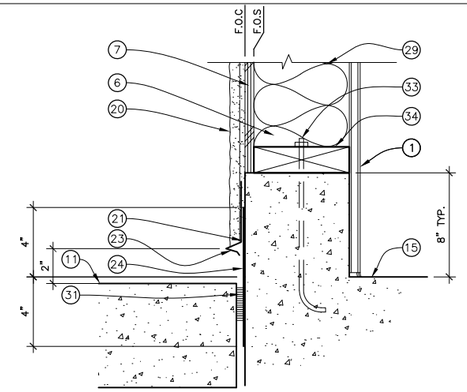

5 PLASTER STUD WALL SILL AT PAVING
SCALE 3" : 1'-0"

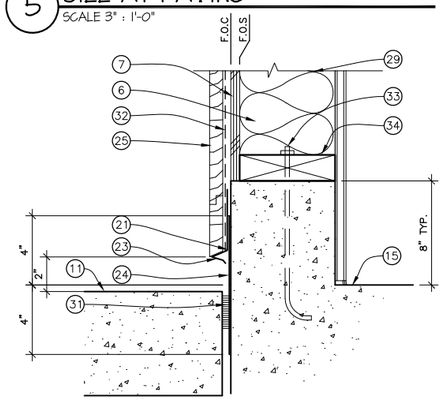

6 WOOD SIDING STUD WALL SILL AT PAVING
SCALE 3" : 1'-0"

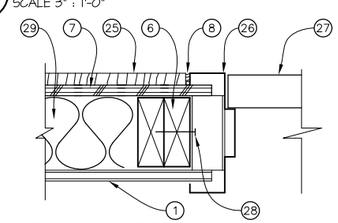

7 HOLLOW METAL DOOR JAMB (HEAD SIM.)
NOT TO SCALE

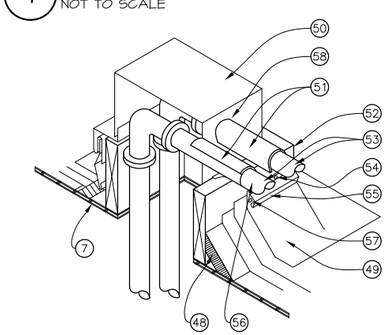

8 PIPING THROUGH ROOF
NOT TO SCALE

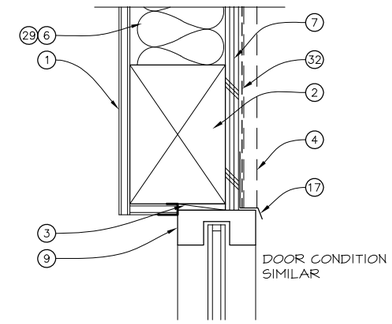

1 WINDOW/HEAD/JAMB
SCALE 3" : 1'-0"

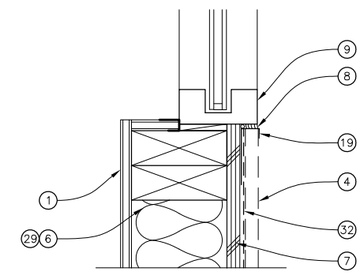

2 WINDOW SILL
SCALE 3" : 1'-0"

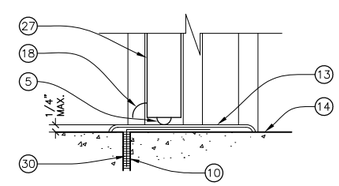

3 DOOR THRESHOLD
SCALE 3" : 1'-0"

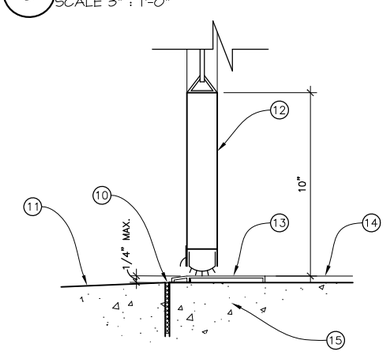

4 STOREFRONT DOOR THRESHOLD
SCALE 3" : 1'-0"

NOTE LEGEND

1 FULL HEIGHT 5/8" TYPE 'X' GYPSUM BOARD. LEVEL 4 FINISH.
2 HEADER. SEE STRUCTURAL DRAWINGS.
3 SHIM.
4 FINISH PLASTER OR WOOD SIDING.
5 DOOR SWEEP
6 WALL FRAMING. SEE STRUCTURAL DRAWINGS.
7 PLYWOOD SHEATHING. SEE STRUCTURAL DRAWINGS.
8 SEALANT.
9 ALUMINUM STOREFRONT.
10 2-PART ELASTOMERIC SEALANT OVER PREFORMED JOINT FILLER.
11 CONCRETE PAVING. SEE SITE PLAN AND CIVIL DRAWINGS.
12 STOREFRONT DOOR. SEE DOOR SCHEDULE.
13 ALUMINUM THRESHOLD SET IN MASTIC. 1/2" MAX. RISE.
14 FLOOR FINISH.
15 CONCRETE FLOOR SLAB. SEE STRUCTURAL DRAWINGS.
16 DOOR JAMB.
17 SHEET METAL FLASHING AND DRIP.
18 DRIP AT DOOR FRAME
19 SHEET METAL EDGE FLASHING.
20 7/8" PLASTER WITH METAL LATH.
21 CONTINUOUS SEALANT BEHIND WEEP SCREED.
22 IX NAILER.
23 GALVANIZED METAL WEEP SCREED.
24 8" LONG METAL FLASHING STRIP, EXTENDING 4" BELOW FINISH FLOOR AND 4" ABOVE WEEP SCREED.
25 3/4" WOOD SIDING, SEE EXTERIOR ELEVATIONS.
26 DOOR FRAME, SEE DOOR SCHEDULE
27 DOOR, SEE DOOR SCHEDULE
28 2-1/2" #7 WOOD SCREW AT 16" O.C.
29 R-19 INSULATION AT ALL EXTERIOR WALLS.
30 METAL FLASHING. EXTEND UNDER THRESHOLD.
31 EXPANSION JOINT MATERIAL WITH SEALANT AT TOP.
32 WATER RESISTANT BARRIER OVER LAP FLASHING.
33 ANCHOR BOLT, SEE STRUCTURAL DRAWINGS.
34 2x PRESSURE TREATED SILL PLATE.
35 METAL J-MOLD FLASHING.
36 SEALANT OVER BACKING ROD.
37 NOT USED
38 NOT USED.
39 NOT USED.
40 HANGER ROD PER MANUFACTURER, WHERE OCCURS. SEE EXTERIOR ELEVATIONS.
41 ALUMINUM INTERMEDIATE TROUGH PER MANUFACTURER.
42 ROLL FORMED ALUMINUM DECKING PER MANUFACTURER. INSTALL WITH SLOPE TO DRAIN PER MANUFACTURER'S SPECIFICATIONS.
43 CANOPY BRACING TO WALL. SEE STRUCTURAL DRAWINGS.
44 DROP-FORGED STEEL CLEVIS PER MANUFACTURER, WHERE OCCURS. SEE EXTERIOR ELEVATIONS.
45 ALUMINUM CLIP ANGLE PER MANUFACTURER, WHERE OCCURS. SEE ROOF PLAN.
46 4" AIRFLOW PREFABRICATED METAL AWNING BY BEAGLE.
47 BRACKET PER MANUFACTURER. SEE STRUCTURAL DRAWINGS FOR WALL BRACING.
48 3" FIBER CANT.
49 MODIFIED BITUMEN FLASHING STRIP.
50 24 GA. GALVANIZED SHEET METAL ENCLOSURE. SLOPE TO DRAIN. PAINT PROCESS "EMS".
51 SHEET METAL OR FLEX-TUBE COLLAR.
52 FLASHING RECEIVER.
53 SLOPE PIPES AWAY FROM HOOD.
54 FASTENERS @ 24" O.C.
55 COUNTERFLASHING.
56 PROVIDE MINIMUM 4" CLEARANCE FROM PIPES TO TOP OF CURB AND MINIMUM 2" BETWEEN PIPES.
57 FASTENERS @ 8" O.C.
58 SEALANT ALL AROUND, TYPICAL.
59 6x6 BLOCKING PER STRUCTURAL DRAWINGS.
60 CAULK.
61 CORNER BEAD.
62 WATER RESISTANT BARRIER BEHIND FINISH.

RASMUSSEN & ASSOCIATES
Architecture
Planning
Interiors
2018-01-16 PRELIMINARY SET
NOT FOR CONSTRUCTION
21 S. California Street
Fourth Floor
Ventura, California 93001
(805) 648-1234
LICENSED ARCHITECT LARRY RASMUSSEN C-4848 REN. 9-30-18 STATE OF CALIFORNIA

Sheet Title: DETAILS

Revisions	
1	1/16/18 P.C.CORR.

R&A No:	A161305
Date:	10/18/17
Drawn:	L.T.
Checked:	J.J.L.
Consult. No:	

RIVIERA SHOPPING CENTER
STARBUCKS COFFEE HOUSE
4710 TELEPHONE ROAD
VENTURA, CALFORNIA 93003

Sheet No.
A8.2

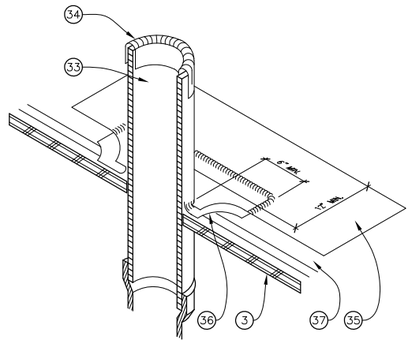

8 VENT THROUGH ROOF
NOT TO SCALE

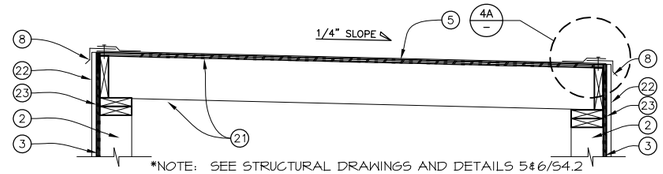

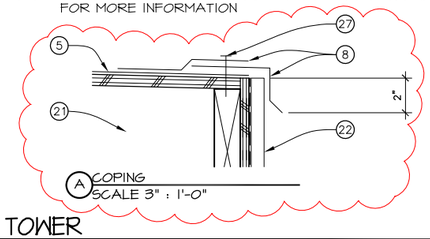

4 TOP OF TOWER
SCALE 1" : 1'-0"

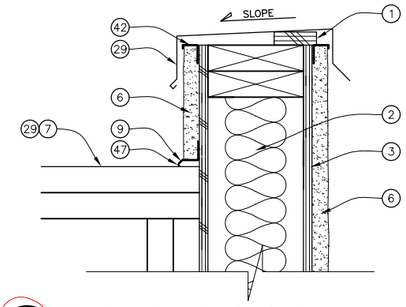

1 HIGH TO LOW PARAPET
SCALE 3" : 1'-0"

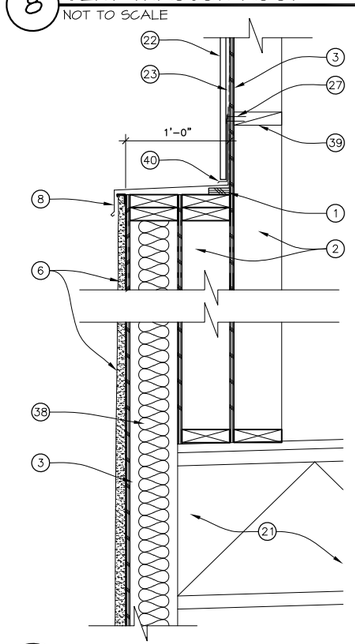

9 FURRED PARAPET
SCALE 1-1/2" : 1'-0"

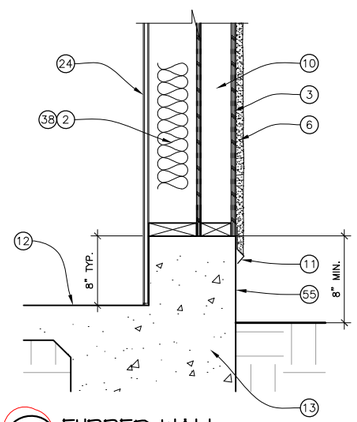

12 FURRED WALL
SCALE 1-1/2" : 1'-0"

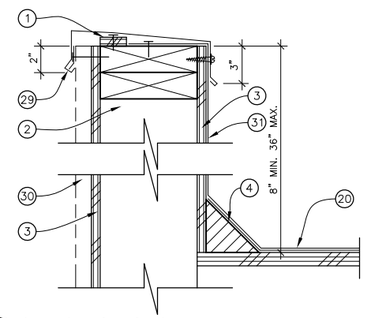

5 LOW PARAPET
SCALE 3" : 1'-0"

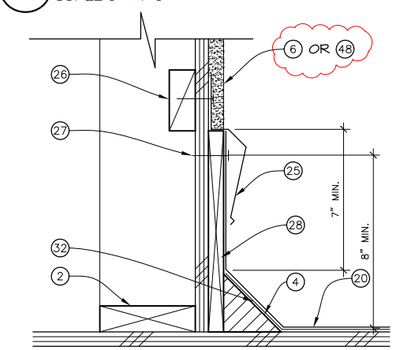

6 CANT/FLASHING AT TALL PARAPET
SCALE 3" : 1'-0"

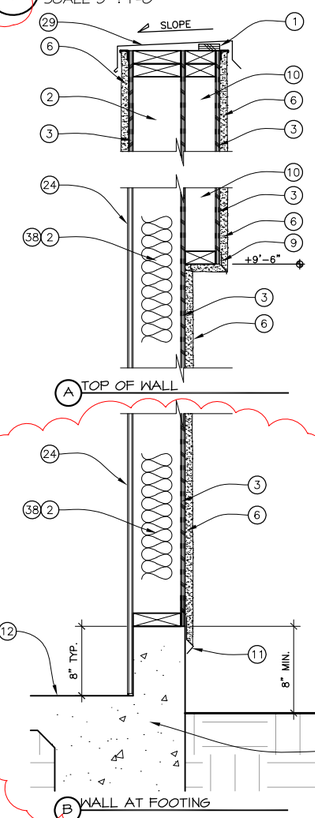

2 RECESSED PLASTER WALL
SCALE 1-1/2" : 1'-0"

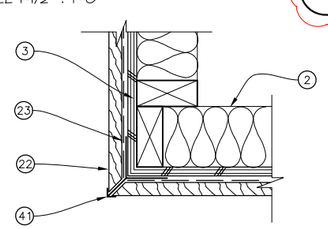

10 TRIM @ WOOD CORNER - PLAN VIEW
SCALE 3" : 1'-0"

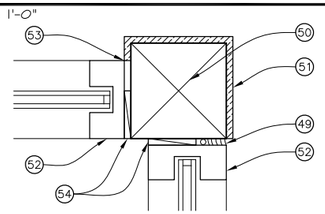

11 ALUMINUM CLADDING - PLAN VIEW
SCALE 3" : 1'-0"

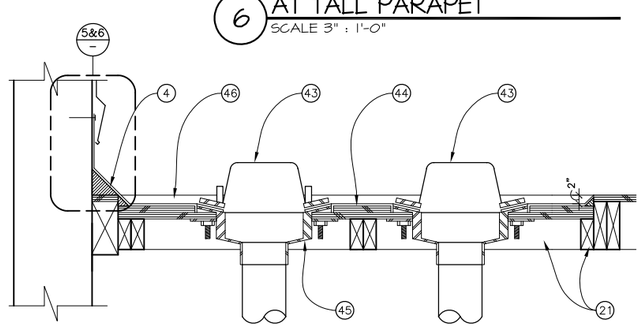

7 ROOF DRAIN AND OVERFLOW
N.T.S.

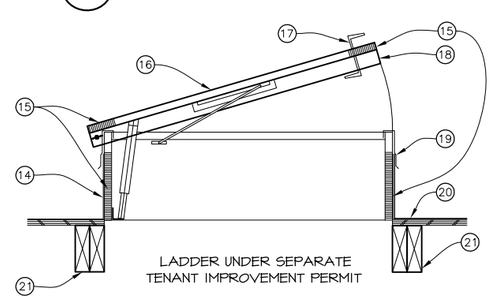

3 ROOF ACCESS HATCH
SCALE 1-1/2" : 1'-0"

NOTE LEGEND

1 SHIM STRIP TO GENERATE FLASHING SLOPE.
2 WALL FRAMING. SEE STRUCTURAL DRAWINGS.
3 PLYWOOD SHEATHING. SEE STRUCTURAL DRAWINGS.
4 3" FIBER CANT.
5 FOUR-PLY BUILT-UP ROOFING SYSTEM OVER PLYWOOD SHEATHING. "JOHNS MANVILLE, 4GNC CR, CLASS A, FM 1-90" UL 790, REPORT #TGFU.R10167 AT "LID" ON TOWER. PROVIDE "COOL ROOF" WHITE FINISH. SLOPE 1/4" PER FOOT.
6 7/8" FINISH PLASTER WITH METAL LATH. SEE EXTERIOR ELEVATIONS A3.1 & A3.2.
7 TOP OF ADJACENT PARAPET.
8 24 GA SHEET METAL EDGE FLASHING. PAINT TO MATCH WALL.
9 SHEET METAL DRIP.
10 2 x 4 WOOD STUD FRAMING.
11 SHEET METAL WEEP SCREED.
12 FINISH SURFACE.
13 CONCRETE FOOTING. SEE STRUCTURAL DRAWINGS.
14 RUN BASE SHEETS AND PLIES UP CANT AND UNDER CAP FLASHING.
15 1" RIGID FIBER INSULATION AND METAL LINER.
16 NEOPRENE SEAL ALL AROUND COVER.
17 SPRING LATCH WITH INSIDE AND OUTSIDE HANDLES AND PADLOCK HASP INSIDE.
18 11 GAUGE ALUMINUM COVER.
19 INTEGRAL CAP FLASHING.
20 ROOFING OVER PLYWOOD ROOF SHEATHING.
21 ROOF FRAMING. SEE STRUCTURAL DRAWINGS.
22 3/4" WOOD SIDING. SEE EXTERIOR ELEVATIONS A3.1 & A3.2.
23 WATER RESISTANT BARRIER.
24 5/8" TYPE 'X' GYPSUM BOARD. LEVEL 4 FINISH.
25 REMOVABLE 24 GA. GALVANIZED SHEET METAL FLASHING. PAINT TO MATCH ADJACENT PARAPET WALL SURFACE. SEE EXTERIOR ELEVATIONS.
26 2x NAILER.
27 FASTENER @ 8" O.C.
28 1x NAILER.
29 24 GA. PAINTED GALVANIZED METAL CAP FLASHING WITH FLAT LOCK SEAMS, CONTINUOUS CLEAT, AND SLOTTED SCREW HOLES PER S.M.A.C.N.A FIGURE 3-1 AND FIGURE 3-2 #2. PROVIDE STAINLESS STEEL SCREWS AND NEOPRENE WASHERS @ 24" O.C. OVER MIRAFI 860 WATERPROOFING. PAINT TO MATCH ADJACENT PARAPET WALL SURFACE.
30 FINISH PLASTER OR WOOD SIDING.
31 ROOFING CAP SHEET BASE FLASHING.
32 BASE FLASHING SYSTEM SET IN FLASHING CEMENT.
33 PLUMBING VENT STACK.
34 3" HIGH #4 LEAD CAP OVER VENT STACK. ROLL FLASHING 1" DOWN PIPE.
35 MODIFIED ROOFING FLASHING STRIP.
36 SET #4 LEAD FLANGE IN MASTIC. PRIME FLANGE PRIOR TO STRIPPING.
37 MODIFIED ROOFING MEMBRANE.
38 R-19 INSULATION AT ALL EXTERIOR WALLS.
39 2x BLOCKING.
40 SHEET METAL FLASHING AND DRIP.
41 CORNER TRIM; BY FLANNERY #W POC75-375 MILL FINISH. PAINT SHERWIN WILLIAMS SW7019 "GAUNTLET GREY"
42 J MOULD.
43 ROOF AND OVERFLOW DRAINS WITH FLASHING CLAMP WITHIN 2" SUMP U.N.O., SEE PLUMBING DRAWINGS FOR TERMINATION OF LEADERS.
44 (2) LAYERS 3/4" PLYWOOD AT BOTTOM OF SUMP.
45 ROOF OR OVERFLOW DRAIN RECEIVER AND CLAMPING RING, PROVIDE 2" HIGH COLLAR AT OVERFLOW DRAIN.
46 #4 LEAD PAN WITHIN 2" DEEP SUMP.
47 SEALANT
48 3/4" WOOD SIDING AT TOWER LOCATION. SEE EXTERIOR ELEVATIONS.
49 SEALANT OVER BACKING ROD.
50 6X6 POST. SEE STRUCTURAL DRAWINGS.
51 ALUMINUM CLADDING TO MATCH ADJACENT WINDOWS.
52 ALUMINUM WINDOW. SEE EXTERIOR ELEVATIONS AND WINDOW TYPES ON SHEET A2.1.
53 CAULK
54 SHIM
55 INCREASE WIDTH OF FOOTING FOR ADDITIONAL 1/2" PLYWOOD THICKNESS AT FURRED WALL LOCATION.

RASMUSSEN & ASSOCIATES
Architecture
Planning
Interiors
2018-01-16 PRELIMINARY SET
NOT FOR CONSTRUCTION
21 S. California Street
Fourth Floor
Ventura, California 93001
(805) 648-1234
LICENSED ARCHITECT LANE RASMUSSEN C-4848 REN. 9-30-18 STATE OF CALIFORNIA

Revisions	
1	1/16/18 P.C.CORR.

R&A No:	A161305
Date:	10/18/17
Drawn:	L.T.
Checked:	J.J.L.
Consult. No:	

Sheet Title: DETAILS

RIVIERA SHOPPING CENTER
STARBUCKS COFFEE HOUSE
4710 TELEPHONE ROAD
VENTURA, CALFORNIA 93003

Sheet No.
A8.3

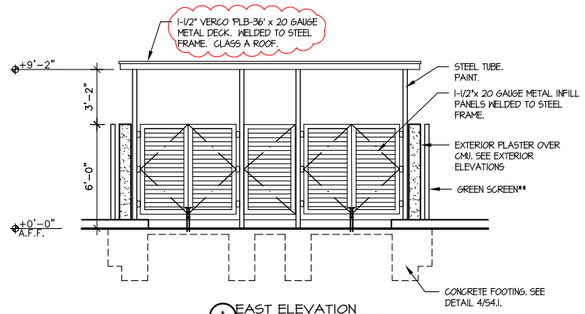

A EAST ELEVATION

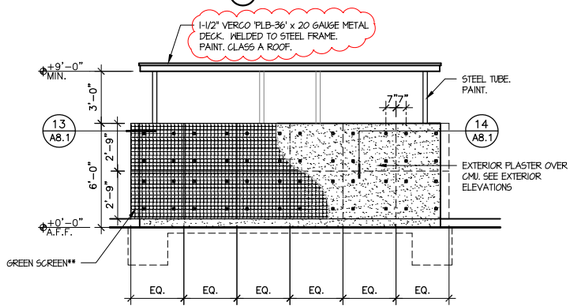

B WEST ELEVATION

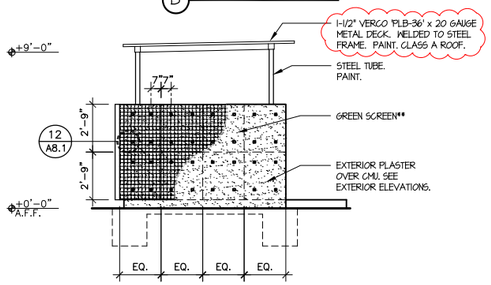

C SOUTH ELEVATION

(NORTH ELEVATION SIMILAR)

** DO NOT INSTALL GREENSCREEN AT TRASH ENCLOSURE FOR CHUCKEE CHEESE'S. SEE SITE PLAN.

6 ELEVATIONS

SCALE 1/4" : 1'-0"

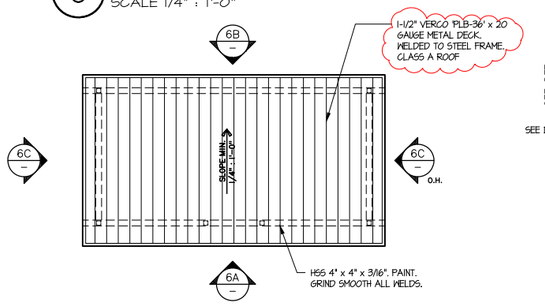

7 ROOF PLAN

SCALE 1/4" : 1'-0"

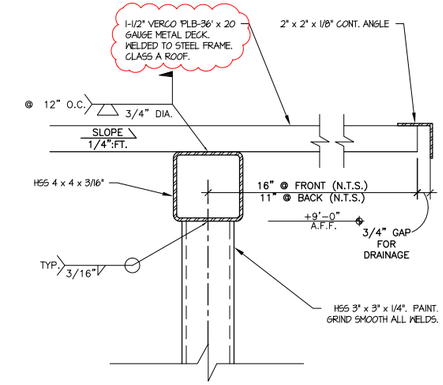

A AT FRONT & BACK

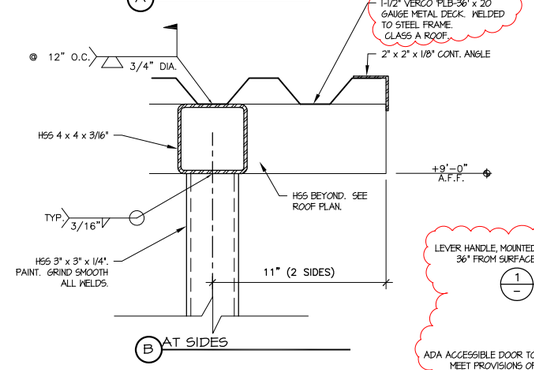

B AT SIDES

4 TRASH ENCLOSURE ROOF

SCALE 3" : 1'-0"

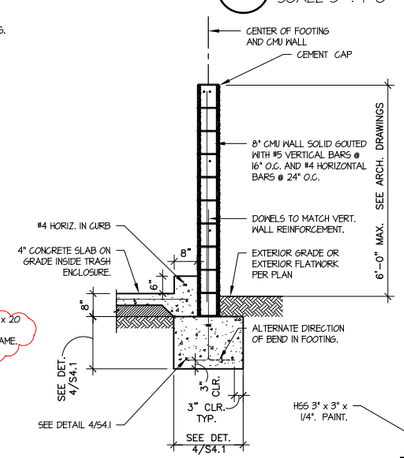

A SECTION @ BACK WALL

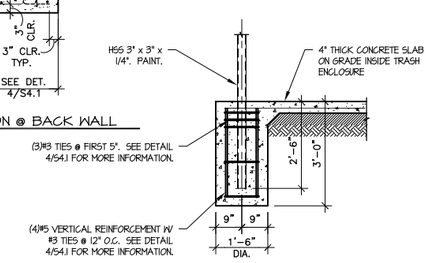

B SECTION @ FRONT

5 TRASH ENCLOSURE WALL SECTIONS

SCALE 1/2" : 1'-0"

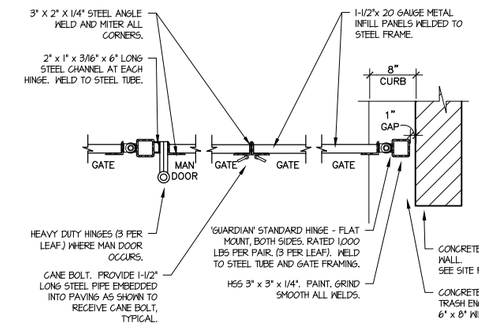

1 TRASH ENCLOSURE GATE HINGE

SCALE 1" : 1'-0"

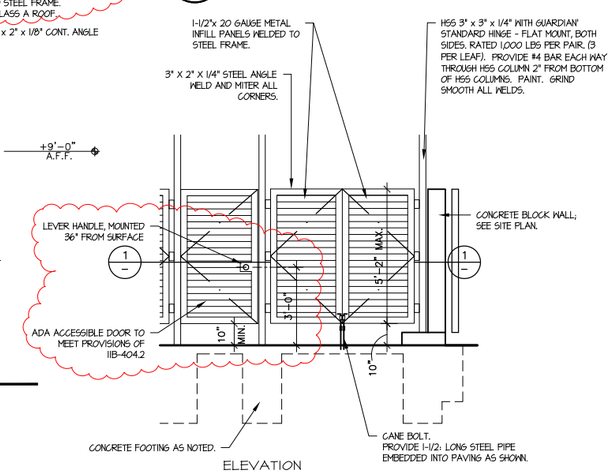

ELEVATION

2 TRASH ENCLOSURE GATES

SCALE 3/8" : 1'-0"

COLOR / MATERIAL LEGEND

P1 PAINT ALL PLASTER WALLS
30-30 SAND FLOAT
SHERWIN WILLIAMS; PACER WHITE, SW6098

P3 PAINT ALL METAL
SHERWIN WILLIAMS; BLACK MAGIC, SW6991

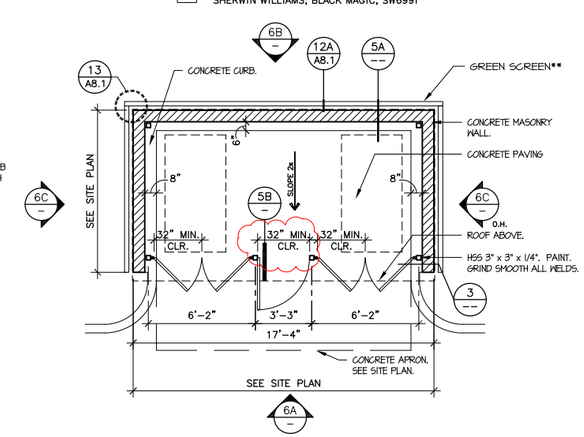

3 FLOOR PLAN

SCALE 1/4" : 1'-0"

GENERAL NOTES

1. ALL WORK SHALL CONFORM WITH THE 2016 CALIFORNIA BUILDING CODE, (CBC), THE 2015 INTERNATIONAL BUILDING CODE, (IBC), AND ALL LOCAL ORDINANCES.
2. THE CONTRACTOR SHALL VERIFY ALL DIMENSIONS AND CONDITIONS PRIOR TO STARTING CONSTRUCTION AND BRING TO THE ATTENTION OF THE ENGINEER ANY DISCREPANCIES OR INCONSISTENCIES.
3. NO STRUCTURAL MEMBER SHALL BE CUT, NOTCHED, BORED OR OTHERWISE WEAKENED EXCEPT AS ALLOWED BY THE CALIFORNIA BUILDING CODE OR APPROVED BY THE ENGINEER.
4. THE ENGINEER SHALL BE NOTIFIED OF ANY UNUSUAL OR UNFORSEEN CONDITION WHICH AFFECTS THE STRUCTURAL STABILITY OF THE BUILDING PRIOR TO CONTINUING WITH CONSTRUCTION. SHOULD ANY CONDITION ARISE WHERE THERE APPEARS TO BE AN ERROR ON THE DRAWINGS OR A DISCREPANCY BETWEEN THE DRAWINGS AND CONDITIONS IN THE FIELD, THE ENGINEER SHALL BE NOTIFIED PRIOR TO CONTINUING WITH THE WORK.
5. IN THE CASE WHERE TWO OR MORE DETAILS APPLYING TO THE SAME PART OF THE WORK ARE IN CONFLICT, THE MOST RESTRICTIVE SHALL GOVERN UNLESS CLARIFIED OR OTHERWISE APPROVED BY THE ENGINEER.
6. REVIEW OF SHOP DRAWINGS MEANS REVIEW OF GENERAL METHOD OF FABRICATION ONLY. DIMENSIONS AND QUANTITIES MAY NOT BE CHECKED, AND REVIEW OF THE SHOP DRAWINGS DOES NOT RELIEVE THE CONTRACTOR FROM COMPLIANCE WITH THE CONSTRUCTION DOCUMENTS UNLESS SPECIFICALLY SO INDICATED IN THE REVIEW.
7. THE ENGINEER HAS NOT BEEN RETAINED FOR SUPERVISION OR INSPECTION DURING CONSTRUCTION, BUT WILL RESOLVE STRUCTURAL ITEMS BROUGHT TO HIS ATTENTION DURING CONSTRUCTION.
8. THE CONTRACTOR SHALL BE RESPONSIBLE FOR ALL SHORING AND BRACING REQUIRED TO PROTECT PERSONNEL AND ADJACENT PROPERTY DURING CONSTRUCTION. THE CONTRACTOR SHALL ADEQUATELY BRACE ELEMENTS OF THE STRUCTURE DURING CONSTRUCTION TO ENSURE THE SAFETY OF THE STRUCTURE.
9. REFER TO THE ARCHITECTURAL DRAWINGS FOR DIMENSIONS, ELEVATIONS, AND SLOPES NOT SHOWN ON THE STRUCTURAL DRAWINGS.

FOUNDATION

1. THERE IS NO SOILS REPORT FOR THIS PROJECT. THE CONTRACTOR SHALL VERIFY THAT ALL FOOTINGS BEAR A MINIMUM OF 12" INTO FIRM, UNDISTURBED SOILS.
2. ALLOWABLE SOIL BEARING VALUE IS: 1,000 PSF FOR ALL FOOTINGS AND ALL FOOTINGS SHALL BARE INTO FIRM UNDISTURBED SOILS.
3. ALL EARTH CUTS OVER 5'-0" IN HEIGHT SHALL BE BRACED BY TEMPORARY SHORING OR A TWO PHASE SLOT CUT WITH MAX. 6'-0" SLOTS. THE CONTRACTOR SHALL BE RESPONSIBLE FOR THE DESIGN OF TEMPORARY SHORING AND BRACING.
4. ALL GRADES AROUND THE PERIMETER OF THE STRUCTURE SHALL SLOPE AWAY FROM THE STRUCTURE TO PREVENT WATER FROM ENTERING THE BUILDING OR PONDING ADJACENT TO THE FOOTINGS.

CONCRETE

1. ALL CONCRETE UNLESS OTHERWISE SHOWN ON THE PLANS SHALL BE HARDROCK CONFORMING TO ASTM C-94, WITH A MIN. COMPRESSIVE STRENGTH AT 28 DAYS OF F'c = 2,500 PSI.
2. AGGREGATE FOR THE CONCRETE SHALL CONFORM TO ASTM C-33, INCLUDING APPENDIX "XI".
3. THE CONTRACTOR SHALL TAKE ADEQUATE PRECAUTIONS FOR MIXING, PLACING, FINISHING, CURING, AND PROTECTING CONCRETE DURING UNFAVORABLE WEATHER CONDITIONS.
4. ALL REINFORCING STEEL SHALL BE NEW STOCK DEFORMED BARS CONFORMING TO ASTM A-615, GRADE 60 EXCEPT #3 BARS MAY BE GRADE 40. ALL WELDED REINF. STEEL SHALL BE ASTM-A706. ALL BARS SHALL BE FREE OF RUST, GREASE, MILL SCALE OR ANY OTHER MATERIALS WHICH MIGHT AFFECT ITS BOND TO THE CONCRETE. ALL BAR BENDS SHALL BE MADE COLD.
5. PROVIDE 3/4" CHAMFER ON ALL EXPOSED CORNERS.
6. BAR SPLICES SHALL BE LAP SPLICES W/MIN. 40 BAR DIAM. LAP W/ AN 18" MIN. (WHICHEVER IS GREATER) STAGGER LAP SPLICES OF MULTIPLE BARS, (i.e. IN CONT. FOOTING W/ 2 HORIZ. BARS TOP AND BOTTOM STAGGER TOP BAR LAP SPLICES AND STAGGER BOTTOM BAR LAP SPLICES. SPLICES DO NOT HAVE TO BE STAGGERED BETWEEN TOP AND BOTTOM BARS).
7. REINFORCING BARS SHALL HAVE THE FOLLOWING CONCRETE COVER, (UNLESS NOTED OTHERWISE IN DETAILS):

   CONCRETE POURED AGAINST EARTH ..... 3 INCHES
   CONCRETE BEAMS AND COLUMNS ..... 2 INCHES
   CONCRETE SLABS ABOVE GRADE ..... 1 INCH

8. DRYPACK SHALL BE MIXED IN THE PROPORTIONS OF 1 PART PORTLAND CEMENT TO 2-1/2 PARTS SAND WITH ENOUGH WATER TO PRODUCE STIFF MIX. DRYPACK SHALL BE THOROUGHLY TAMPED INTO PLACE TO ENSURE A DENSE FINISH, FREE OF VOIDS.
9. THE SLUMP OF THE CONCRETE SHALL BE THE MINIMUM THAT IS PRACTICABLE. WHEN VIBRATORS ARE USED TO CONSOLIDATE THE CONCRETE, THE SLUMP SHALL NOT EXCEED 4 INCHES, OTHERWISE THE SLUMP SHALL NOT EXCEED 6 INCHES.
10. ALL CONCRETE SHALL BE ADEQUATELY CONSOLIDATED DURING PLACEMENT AND ALL REINFORCING STEEL AND EMBEDDED ITEMS SHALL BE SECURELY TIED IN PLACE TO PREVENT DISPLACEMENT DURING CONCRETE PLACEMENT.
11. EXCEPT WHERE INDICATED OTHERWISE, ALL REINFORCING STEEL SHALL BE BENT AND PLACED IN ACCORDANCE WITH THE "CODE OF STANDARD PRACTICE AND THE SPECIFICATIONS FOR PLACING REINFORCING STEEL" OF THE CONCRETE REINFORCING STEEL INSTITUTE.

STRUCTURAL STEEL

1. ALL STRUCTURAL STEEL SHALL CONFORM TO ASTM A-36 EXCEPT FOR WIDE FLANGE SHAPES WHICH SHALL CONFORM TO ASTM A-992, GRADE 50. SEE NOTE "2" BELOW FOR PIPES AND TUBE SHAPES.
2. STEEL PIPE SHALL CONFORM TO ASTM A-53, GRADE "B" AND TUBULAR STEEL MEMBERS SHALL CONFORM TO ASTM A-500, GRADE "B".
3. ALL WELDING SHALL BE PERFORMED WITH E70XX ELECTRODES CONFORMING TO AWS D1.1, LATEST EDITION. PROVIDE BACKING PLATES AS REQUIRED FOR FULL PENETRATION WELDS.
4. STRUCTURAL STEEL SHALL BE DETAILED, FABRICATED, AND ERECTED IN ACCORDANCE WITH THE "SPECIFICATIONS FOR THE DESIGN, FABRICATION, AND ERECTION OF STRUCTURAL STEEL FOR BUILDINGS BY THE A.I.S.C., LATEST EDITION.
5. ALL WELDING SHALL BE DONE BY CERTIFIED WELDERS IN THE SHOP OF A FABRICATOR APPROVED BY THE LOCAL BUILDING DEPARTMENT FOR WELDING IN THE SHOP. FOR SHOPS NOT APPROVED, WELDING SHALL BE CONTINUOUSLY INSPECTED BY A LICENSED DEPUTY INSPECTOR PER SECTION 1704.2.5 OF THE CBC.
6. CONTINUOUS INSPECTION BY A LICENSED DEPUTY INSPECTOR IS REQUIRED FOR ALL FIELD WELDING PER SEC. 1705.2 OF THE CBC, EXCEPT MINOR ITEMS WHEN APPROVED BY THE ENGINEER AND BUILDING INSPECTOR.
7. ALL FABRICATED ITEMS SHALL BE SHOP PAINTED WITH ONE COAT OF SHOP PRIMER EXCEPT FOR ITEMS ENCASED IN CONCRETE AND SURFACES TO BE WELDED. STEEL SURFACES ENCASED IN CONCRETE SHALL BE LEFT UNPAINTED, BUT FREE FROM RUST, OIL, OR OTHER DELETERIOUS MATERIALS WHEN ENCASED.
8. BOLT HOLES SHALL BE 1/16 INCH LARGER THAN BOLT DIAMETER UNLESS SLOTTED HOLES ARE INDICATED IN DETAILS. BOLT HOLES SHALL BE PUNCHED OR DRILLED, BURNED HOLES ARE NOT PERMITTED.
9. BOLT HEADS OR NUTS BEARING ON SLOPING SURFACES SHALL BE EQUIPPED WITH BEVELED WASHERS.
10. MACHINE BOLTS SHALL CONFORM TO ASTM A-307 AND ANCHOR BOLTS TO ASTM A-307 UNLESS OTHERWISE NOTED ON PLANS.

MASONRY

1. ALL CONCRETE BLOCKS SHALL BE GRADE "N" MEDIUM WEIGHT UNITS CONFORMING TO ASTM C-90, AND SHALL HAVE A NET AREA COMPRESSIVE STRENGTH OF 2,000 PSI (CBC 2105A.2)
2. REINFORCING STEEL FOR MASONRY WORK SHALL BE DEFORMED AND SHALL CONFORM TO ASTM A-615, GRADE 60. ALL REINFORCING STEEL SHALL BE POSITIONED AS INDICATED ON PLANS. LAP SPLICES OF REINFORCING STEEL IN MASONRY SHALL BE 48 BAR DIAMETERS WITH A MIN. OF 18 INCHES, WHICHEVER IS GREATER. WHEN ADJACENT SPLICES ARE SEPARATED BY 3 INCHES OR LESS, (I.E. 2 BARS IN 8" CMU), THE LAP LENGTH SHALL BE INCREASED TO 60 BAR DIAMETERS, UNLESS THE LAP SPLICES ARE STAGGERED AT LEAST 24 BAR DIA. OR SPECIFIC LAP LENGTHS ARE SHOWN ELSEWHERE ON PLANS.
3. ALL MASONRY WORK SHALL CONFORM TO CHAPTER 21 OF THE 2016 CALIFORNIA BUILDING CODE.
4. GROUT SHALL CONFORM TO TABLE 2103.3 OF THE CBC AND ASTM C476, TABLE 1, AND SHALL HAVE A MIN. COMPRESSIVE STRENGTH AT 28 DAYS OF 2,000 PSI. GROUT SHALL BE PROPERLY CONSOLIDATED BY MEANS OF MECHANICAL VIBRATORS. ALL REINFORCING STEEL AND EMBEDDED ITEMS SHALL BE PROPERLY SECURED IN POSITION PRIOR TO GROUTING.
5. PROVIDE VERTICAL DOWELS WITH STANDARD HOOKS AT BOTTOM FROM ALL FOOTINGS WITH SIZE AND SPACING TO MATCH VERTICAL MASONRY REINFORCING, UNLESS OTHERWISE NOTED IN PLANS.
6. PROVIDE 2-#5 VERTICAL, FULL HEIGHT, AT SIDES OF ALL OPENINGS, ENDS OF ALL WALLS, AND CORNERS, UNLESS OTHERWISE NOTED.
7. PROVIDE 2-#5 AT BOTTOM OF ALL LINTELS W/ A MIN. OF INCH EXTENSION PAST SIDE OF OPENING, UNLES OTHERWISE NOTED ON PLANS OR DETAILS. USE 2-#4 CONT. HORIZ. @ TOP OF ALL SILLS.
8. VERTICAL REINFORCING SHALL BE LOCATED AT THE CENTER OF THE WALL UNLESS OTHERWISE NOTED IN DETAILS AND SHALL BE HELD IN POSITION AT INTERVALS NOT EXCEEDING 8'-0".
9. ALL HORIZONTAL STEEL SHALL BE IN LINTEL OR CHANNEL BLOCKS.
10. UNLESS OTHERWISE INDICATED ALL EXTERIOR JOINTS SHALL BE 3/8" TOOLED CONCAVE, AND INTERIOR JOINTS SHALL BE STRUCK FLUSH AND SACKED.
11. NO PIPING OTHER THAN CONDUIT SHALL BE EMBEDDED IN THE MASONRY UNLESS APPROVED BY THE ENGINEER.
12. MASONRY UNITS SHALL BE LAID IN A "RUNNING" BOND. "STACK" BOND SHALL BE USED ONLY WITH THE APPROVAL OF THE ENGINEER.

SPECIAL INSPECTIONS

PROVIDE SPECIAL INSPECTION BY A LICENSED DEPUTY INSPECTOR APPROVED BY THE LOCAL BUILDING OFFICIAL FOR THE FOLLOWING WORK IN ACCORDANCE WITH THE REQUIREMENTS OF CHAPTER 17 OF THE CALIFORNIA BUILDING CODE:

1. FOR ALL CONCRETE WITH AN F'c OVER 2,500 PSI.
2. FOR ALL REINFORCING STEEL WHICH IS PLACED IN CONCRETE WITH AN F'c OVER 2,500 PSI.
3. FOR ALL FIELD WELDING.
4. FOR ALL STRUCTURAL STEEL FABRICATED IN THE SHOP OF A FABRICATOR NOT APPROVED BY THE LOCAL BUILDING DEPARTMENT FOR FABRICATION. A FABRICATOR SHALL BE CONSIDERED "APPROVED" ONLY IF THE FABRICATOR HAS COMPLIED WITH THE REQUIREMENTS OF SECTION 1701.7 OF THE CBC.

RASMUSSEN & ASSOCIATES
Architecture
Planning
Interiors
2018-01-16 PRELIMINARY SET
NOT FOR CONSTRUCTION
21 S. California Street
Fourth Floor
Ventura, California 93001
(805) 648-1234
LICENSED ARCHITECT LARRY RASMUSSEN C-4848 REN. 9-30-19 STATE OF CALIFORNIA

Revisions	
R&A No:	A161305
Date:	10/18/17
Drawn:	L.T.
Checked:	J.J.L.
Consult. No:	
1/16/18 P.C.CORR.	

Sheet Title: TRASH ENCLOSURE DETAILS

RIVIERA SHOPPING CENTER
STARBUCKS COFFEE HOUSE
4710 TELEPHONE ROAD
VENTURA, CALIFORNIA 93003

Sheet No.
A8.4

PLANNING COMMISSION RESOLUTION NO. CD-2017-_____

APPROVING A PLANNED DEVELOPMENT PERMIT AMENDMENT AND A CONCURRENT MINOR VARIANCE FOR THE RIVERIA SHOPPING CENTER

PROJECT – 10066
CASE NO. PDA-7-16-38124

BE IT RESOLVED by the Planning Commission of the City of San Buenaventura as follows:

SECTION 1: An application has been filed by Athena Property Management, pursuant to the San Buenaventura Municipal Code, for a Planned Development Permit Amendment (PDA-7-16-38124) for the proposed demolition of an existing 3,428-square foot vacant commercial building within the 237,788-square foot Riviera Shopping Center, the creation of two (2) new pad buildings (one 1,827-square feet and the other 5,610-square feet) with a Concurrent Minor Variance for a front yard setback reduction from 50-feet to 39-feet (Pad Building I) and from 50-feet to 18-feet (Pad Building II), a Concurrent Minor Variance for a reduction in the parking setback from 15-feet to 12-feet, a new drive through bank ATM, a new parking lot, new landscaping, hardscaping, and circulation improvements throughout, and removal of the Architectural Theme Criteria for the Riviera Shopping Center on seven separate parcels comprising 23.007 acres at 4714-4723 Telephone Road in the Commercial Planned Development (CPD) Zone with a land use designation of Commerce. The project site is identified as lots 4, 5, 6, and 7 of Tract No 2776-1 in the City of San Buenaventura, County of Ventura, State of California and being a subdivision of portions of Lots 11, 12, 13, and 14 of the Olivas Portion of Rancho San Miguel as per Map recorded in Book 2, Miscellaneous Record, Page 105 and commonly referred to as Assessor's Parcel Numbers 084-0-072-285, 084-0-072-295, 084-0-072-305, and 084-0-072-315.

SECTION 2: All proceedings having been duly taken as required by law, and upon review of the information provided, consideration of the testimony given at the public hearing, as well as other pertinent information, the Planning Commission finds as follows:

Planned Development Permit Amendment

1. *Required Finding: "The proposed project conforms to the comprehensive plan and is consistent with the purposes and requirements of this zoning ordinance,"* per San Buenaventura Municipal Code *Section 24.525.070 (1).*

The project site is located within the Arundell community, which is described as the main industrial and warehouse district of Ventura, but also has mixed-use areas with retail, restaurants, and offices within walking distance of many workers. The General Plan envisions this area is ripe for redevelopment into a

new form of community plan and building that incorporates large-scale employment, workforce housing and neighborhood commercial in an economically diverse setting.

The subject site has a General Plan Land Use designation of Commerce which is defined as encouraging a wide range of building types of anywhere from two to six stories (depending on neighborhood characteristics) that house a mix of functions, including commercial, entertainment, office, and housing.

The project site is not identified in the General Plan 2014-2021 Housing Element "Sites Inventory" list.

The proposed building and site improvements would contribute to a development that is consistent with the following goals, policies and actions of the General Plan:

> *Goal 3: Our goal is to protect our hillsides, farmlands and open spaces; enhance Ventura's historic and cultural resources; respect our diverse neighborhoods; reinvest in older areas of our community; and make great places by insisting on the highest standards of quality in architecture, landscaping and urban design.*
>
> *Policy 3A: Sustain and complement cherished community characteristics.*
>
> *Action 3.2: Enhance the appearance of districts, corridors, and gateways (including views from highways) through controls on building placement, design elements and signage.*

The proposed project implements the above goals, policies, and actions because it will allow for new dining, retail and office uses to be located within a commercially designated area, and the new buildings, façade remodels, and landscape and hardscape upgrades will help to enhance the appearance of the Arundell District, where a concentration of several shopping centers are located at a busy intersection. Though Architectural Theme Criteria are sought to be removed, the design of the project will be subject to scrutiny from the Design Review Committee, employing Citywide Design Guidelines.

The proposed project also meets the intent of the adopted Economic Development Strategy – Tourism, Retail, and Quality of Life goal, "to enhance and improve the quality of life for Ventura residents and promote Ventura as a business and vacation destination. Stabilize and expand the retail base by attracting needed retail establishments, marketing vacant storefronts, and supporting existing businesses.

The proposed project implements this goal since it will help to expand the retail base of the city through the construction of new commercial buildings. It will also potentially help to stabilize the existing retail base since the façade remodel and landscape and hardscape improvements will enhance the look of the shopping center, potentially making it more desirable for the existing businesses to remain.

The site is in the Commercial Planned Development (CPD) zone and must comply with Special Development Criteria for Tract 2776. The CPD zone is primarily focused on retail, office, dining establishments, and other professional business services, and the proposed project provides new commercial spaces that would consist of new dining establishments and potential retail stores which conform to the zone.

The project complies with a majority of the CPD zoning provisions and Tract 2776 Special Development Criteria as shown in Attachment C to the Staff Report, incorporated herein by reference, except for Front Setback and Parking Setback requirements, for which variances are sought. The project has also been conditioned to include 84 bicycle parking spaces and 84 carpool/vanpool parking spaces (Condition Nos. 22 & 23) as required by San Buenaventura Municipal Code (SBMC) Chapter 24.415 and will undergo Confirmation of Details by the Design Review Committee. The project was reviewed by the Design Review Committee, which supported rescinding the Architectural Theme Guidelines for Tract 2776 and granting variances. While the proposed front setback reduction for both proposed pad buildings deviates from the required 50-foot setback requirement, it would be consistent with the City's continual movement to a more urban massing typology, bringing buildings closer to front setbacks to activate street frontages.

2. *Required Finding: "The proposed project will be served by adequate water, sewer, public utilities and services, and by adequate vehicular and pedestrian access to insure that the proposed project will not be detrimental to the public health, safety, or welfare,"* per San Buenaventura Municipal Code *Section 24.525.070 (2).*

The proposed project, as conditioned, will be served by adequate water, sewer, public utilities and services. While the proposed project will alter the current delivery of utilities and services, the Public Works Department and Ventura Water have reviewed and conditioned the project to ensure the public health, safety, or welfare and that adequate utilities are available to serve the proposed development. Additionally, the project site is an existing developed shopping center that is already serviced by water, sewer and public services.

The proposed site plan incorporates a revised pedestrian access through the site which is beneficial to vehicular and pedestrian access. The primary pedestrian

linkage to Telephone Road from the anchor stores has also been changed so that it now parallels the primary entrance into the shopping center. This design provides a more intuitive walking path into the heart of the shopping center and helps creates a more predictable traffic flow pattern. Additionally, the design incorporates pedestrian access and connections from the public right-of-way to buildings throughout the site and provides enhanced internal connections that were previously missing by installing a new comprehensive pedestrian path of travel consisting of new sidewalks and crosswalks.

Rescinding the Architectural Theme Guidelines from the original approval would not result in an increase in the demand for water, sewer and other utilities at this location because the Guidelines intent was to ensure the shopping center was developed in an aesthetically compatible manner.

Therefore the project will be served by adequate water, sewer, public utilities, and services and by adequate vehicular and pedestrian access, and will not be detrimental to the public health, safety and welfare.

3. *Required Finding: "New buildings or structures related to the project are compatible with the scale, mass, bulk, and orientation of buildings and structures in the surrounding vicinity,"* per San Buenaventura Municipal Code Section *525.070 (3).*

All reasonable design efforts have been made to ensure the proposed development is compatible with the scale, mass, bulk and orientation of structures in the vicinity. The proposed new pad buildings consist of a single story with a massing of a one to one and a half story building, which match the surrounding buildings and the rest of the shopping center.

The site planning and architectural design of the proposed development was reviewed by the Design Review Committee (DRC) on May 17, 2017 and found to be compatible with the character of the surrounding neighborhood. Moreover, DRC found the proposed project is arranged in a manner that is compatible with the size, scale, and appearance of the adjacent development, and by reducing the front setback the new pad buildings will be consistent with the City's continual movement to a more urban massing typology.

DRC found the proposed project complies with the Citywide Design Guidelines because the new buildings are of similar scale and mass of the surrounding buildings, and each provides multiple articulated planes in their facades as well as in the parapet line. Overall, the proposed buildings would be compatible with and enhance the appearance of the Arundell Community, and would not result in development that is substantially different or unique with regard to bulk, mass and height than that which exists in the area.

Concurrent Minor Variance

For a front setback reduction from 50-feet to 39-feet (Pad Building I) and from 50-feet to 18-feet (Pad Building II) per Tract 2776 Special Development Criteria No. 4(A) and for a parking setback reduction from 15-feet to 12-feet for the parking in front of Pad Building I per Tract 2776 Special Development Criteria No. 8 (C).

5. *Required Finding: "The project authorized by the variance is consistent with the policies and provisions of the [general] plan and with the purposes and requirements of this zoning ordinance" as per Municipal Code Sec. 24.535.120 (1) (a).*

Front Setback Reduction

On May 17, 2017, the Design Review Committee found that the overall project reflects a high level of development and design quality that will enhance and benefit the city as a whole. The reduction in the front setback for the two pad buildings is consistent with the City's continual movement to a more urban massing typology, bringing buildings closer to front setbacks to activate street frontages while still maintaining adequate landscaping, building orientation and functional use of pedestrian and vehicular access within the shopping center.

Additionally, the architectural design of the proposed development is compatible with the character of the surrounding neighborhood which comprises of predominately one story commercial or industrial buildings with a few two stories. However, a majority of the single story buildings have a massing reflecting a one and a half story to two or three story building. The proposed new pad buildings consist of a single story with a massing of a one to one and a half story building, which matches the surrounding buildings and the rest of the shopping center. The Design Review Committee also found that all reasonable design efforts were made to maintain a harmonious, orderly, and attractive development contemplated by the General Plan, Zoning Ordinance and City-wide Design Guidelines because the proposed development, including the two pad buildings, is compatible with the scale, mass, bulk and orientation of the existing shopping center and surrounding neighborhood as discussed in Finding 3.

Therefore the front setback reduction for the two pad buildings authorized by the Concurrent Minor Variance is compatible with existing improvements and consistent with the scale and character of existing development in the same vicinity or zone.

Parking Setback Reduction

While placing parking closer to the public right-of-way is generally not supported by staff or the Design Review Committee, the unique topography of the site helps to screen this encroachment since the adjacent intersection and public sidewalk are at a higher elevation than the parking area. Additionally the DRC reviewed the proposed landscape plans on May 17, 2017 and found that they will provide additional screening of the parking area at the corner.

Therefore the reduction in the parking setback for Pad Building I authorized by the Concurrent Minor Variance is consistent with the policies and provisions of

the General Plan and with the purposes and requirements of this zoning ordinance.

6. *Required Finding: "The project authorized by the variance is compatible with existing improvements and consistent with the scale and character of existing development in the same vicinity or zone" as per Municipal Code Sec.24.535.120 (1) (b).*

Front Setback Reduction

On May 17, 2017, the Design Review Committee found that the overall project reflects a high level of development and design quality that will enhance and benefit the city as a whole. The reduction in the front setback for the two pad buildings is consistent with the City's continual movement to a more urban massing typology, bringing buildings closer to front setbacks to activate street frontages while still maintaining adequate landscaping, building orientation and functional use of pedestrian and vehicular access within the shopping center.

Additionally, the architectural design of the proposed development is compatible with the character of the surrounding neighborhood which comprises of predominately one story commercial or industrial buildings with a few two stories. However, a majority of the single story buildings have a massing reflecting a one and a half story to two or three story building. The proposed new pad buildings consist of a single story with a massing of a one to one and a half story building, which matches the surrounding buildings and the rest of the shopping center. The Design Review Committee also found that all reasonable design efforts were made to maintain a harmonious, orderly, and attractive development contemplated by the General Plan, Zoning Ordinance and City-wide Design Guidelines because the proposed development, including the two pad buildings, is compatible with the scale, mass, bulk and orientation of the existing shopping center and surrounding neighborhood as discussed in Finding 3.

Therefore the front setback reduction for the two pad buildings authorized by the Concurrent Minor Variance is compatible with existing improvements and consistent with the scale and character of existing development in the same vicinity or zone.

Parking Setback Reduction

While placing parking closer to the public right-of-way is generally not supported by staff or the Design Review Committee, the unique topography of the site helps to screen this encroachment since the adjacent intersection and public sidewalk are at a higher elevation than the parking area. Additionally the DRC reviewed the proposed landscape plans on May 17, 2017 and found that they will provide additional screening of the parking area at the corner.

Therefore the reduction in the parking setback for Pad Building I authorized by the Concurrent Minor Variance is consistent with the policies and provisions of the General Plan and with the purposes and requirements of this zoning ordinance.

7. *Required Finding: "The project authorized by the variance will not be detrimental to or adversely impact adjacent properties" as per Municipal Code Sec.24.535.120 (1) (c).*

Front Setback Reduction

The proposed front setback reduction for the two pad buildings will not adversely impact adjacent properties because the two pad buildings will be located closer to the Public right-of way and not an adjoining property line. This reduction in the front setback for the two pad buildings is also consistent with the City's continual movement to a more urban massing typology, bringing buildings closer to front setbacks to activate street frontages while still maintaining adequate landscaping, building orientation and functional use of pedestrian and vehicular access within the shopping center.

Therefore the project authorized by the Concurrent Minor Variance will not be detrimental to or adversely impact adjacent properties.

Parking Setback Reduction

The proposed parking setback reduction for the Pad Building I parking area will not adversely impact adjacent properties because the parking area will be located closer to the Public right-of way and not an adjoining property line. Additionally Pad Building I's parking area will be adjacent to the East main Street, Telephone Road, Valentine Road, and Highway 101 intersection which separates it from any other adjoining property to the north.

Therefore the parking setback reduction for Pad Building I's parking area authorized by the Concurrent Minor Variance will not be detrimental to or adversely impact adjacent properties.

8. *Required Finding: "Approval of the variance does not grant a special privilege inconsistent with the limitations on other properties in the same vicinity or zone" as per Municipal Code Sec. 24.535.120 (1) (d).*

Front Setback Reduction

Approval of the Concurrent Minor Variance for a front setback reduction for the two new pad buildings does not grant a special privilege inconsistent with the

limitations on other properties in the same vicinity or zone. The base CPD zone requires a front yard setback of only 20-feet, but the Tract 2776 Special Development Criteria is much more restrictive, requiring a 50-foot setback from street property lines. If the Pad buildings were developed solely under the CPD zone standards, Pad Building I would not trigger a variance since it is 39-feet from the property line, and Pad Building II would only require a variance for a 5-foot reduction. Other CPD properties and shopping Center's within the Main Street and Telephone Road corridors do not have the same 50-foot front setback restriction, instead relying primarily on the base zone setback standards.

Moreover, the Concurrent Minor Variance for a reduced front setback for the two pad buildings was considered and supported by the DRC as better site design than compliance with the setback standard established by Tract 2776-1 Special Development Criteria, and being compatible with the City's continual movement to a more urban massing typology, bringing buildings closer to front setbacks to activate street frontages, while still maintaining adequate landscaping, building orientation and functional use of pedestrian and vehicular access within the shopping center.

Parking Setback Reduction

Approval of the Concurrent Minor Variance for a parking setback reduction for Pad Building I's parking area does not grant a special privilege inconsistent with the limitations on other properties in the same vicinity or zone. SBMC Sec. 24.415.100(1) identifies that "a landscape strip a minimum of ten feet wide shall be provided along the property lines adjacent to any public or private street," but the Tract 2776 Special Development Criteria is more restrictive with this setback at 15-feet. If Pad Building I's parking area was developed solely under the SBMC standards, the parking area would not trigger a variance since it is 12-feet from the property line or two feet more than the SBMC minimum landscape width. Other CPD properties and shopping centers within the Main Street and Telephone Road corridors do not have the same 15-foot front setback restriction, instead relying primarily on the SBMC setback standards.

While placing parking closer to the public right-of-way is generally not supported by staff or the Design Review Committee, the unique topography of the site helps to screen this encroachment since the adjacent intersection and public sidewalk are at a higher elevation than the parking area. Additionally the DRC reviewed the proposed landscape plans on May 17, 2017 and found that the landscaping will provide additional screening of the parking area at the corner.

9. *Required Finding: "Approval of the variance is not based on economic hardship" as per Municipal Code Sec. 24.535.120 (1) (e).*
Approval of the front setback and parking setback Concurrent Minor Variances are not based on economic hardship. Rather, it would require the developer to

make an economic investment aimed at improving the function and overall value of the existing commercial site.

SECTION 3: California Environmental Quality Act

10. The proposal is Categorically Exempt from the provisions of the California Environmental Quality Act (CEQA), as provided under Sections 15301 (Class 1, Existing Facilities), 15303 (Class 3, New Construction or Conversion of Small Structures), 15304 (Class 4, Minor Alterations to Land), and 15311 (Class 11, Accessory Structures) of the CEQA Guidelines, as the project consists of the construction of two (2) new pad buildings (one 1,827-square feet and the other 5,610 -square feet), a new drive through bank ATM, a new parking lot, and new landscaping, hardscaping, and circulation improvements throughout. Therefore, no further environmental review is required. The exceptions to the categorical exemptions pursuant to Section 15300.2 of the CEQA Guidelines are:

(a) *Location. Classes 3, 4, 5, 6, and 11 are qualified by consideration of where the project is to be located -- a project that is ordinarily insignificant in its impact on the environment may in a particularly sensitive environment be significant. Therefore, these classes are considered to apply all instances, except where the project may impact on an environmental resource of hazardous or critical concern where designated, precisely mapped, and officially adopted pursuant to law by federal, state, or local agencies.*

The project site is located within an existing urban commercial shopping center surrounded by commercial and industrial uses. The proposed project would not create impacts to sensitive wildlife or habitat. Therefore, the project will have no impact on an environmental resource of hazardous or critical concern.

(b) *Cumulative Impact. All exemptions for these classes are inapplicable when the cumulative impact of successive projects of the same type in the same place, overtime is significant.*

The proposed two (2) new pad buildings (one 5,610-square feet and the other 1,827-square feet), drive through bank ATM, new parking lot, and landscaping, hardscaping, and circulation improvements are consistent with the General Plan and Zoning, and consist of improvements to an existing shopping center. Any projects requiring discretionary approval would be analyzed with the General Plan for consistency and CEQA for any potential impacts. Therefore the project will have no significant cumulative impact.

(c) *Significant Effect. A categorical exemption shall not be used for an activity where there is a reasonable possibility that the activity will have a significant effect on the environment due to unusual circumstances.*

RASMUSSEN & ASSOCIATES
Architecture
Planning
Interiors
2018-01-16 PRELIMINARY SET
NOT FOR CONSTRUCTION
21 S. California Street
First Floor
Ventura, California 93001
(805) 648-1234
LICENSED ARCHITECT C-4848 STATE OF CALIFORNIA REN. 9-30-17

REVISIONS	
R&A No:	A161305
Date:	10/18/17
Drawn:	R&A
Checked:	S.B.
Consult. No:	

Sheet Title: PLANNING CONDITIONS

RIVIERA SHOPPING CENTER
STARBUCKS COFFEE HOUSE
4710 TELEPHONE ROAD
VENTURA, CALIFORNIA 93003

Sheet No. PC1

judgment or is amicably resolved or settled, unless the City otherwise decides to waive said fees or any part thereof. The foregoing may not apply if the permittee prevails in the enforcement proceeding.

19. In accepting the benefits of the conditional approval of this discretionary permit and approvals issued in conjunction with this discretionary permit, and as a condition of approval of this permit, the applicant agrees to defend, indemnify, and hold harmless the City of San Buenaventura and its agents, officers, and employees from any claim, action, or proceeding against the City or its agents, officers, or employees brought to attack, set aside, void, or annul the approval of the permit by anyone, including an advisory agency, appeal board, or legislative body of the City. This condition shall be construed to include, without limitation, applicant's agreement to pay any attorney's fees incurred by the City in its choice of defense counsel or awarded against the City or its agents, officers, or employees in any legal action to attack, set aside, void or annul the approval of the application in which the petitioner or plaintiff in such action is the prevailing party and is awarded attorney's fees.

    A. Applicant's obligations set forth in this condition are based on the mutual understanding of the City and the applicant that the City shall promptly notify the applicant of any such claim, action, or proceeding and cooperate fully in the defense, provided that the City's obligation to "cooperate fully" in such defense shall not include payment of any monies for or toward any fees, costs, or expenses of such defense. In any event, the applicant may not be required to pay or perform any settlement of any such claim, action, or proceeding unless the settlement is approved by the applicant.

    B. Upon notice to Applicant of a legal challenge to the approval of the permit approved hereunder, Applicant shall execute and return a "Deposit, Reimbursement, and Indemnification Agreement".

    C. Nothing contained in this condition is intended to, or shall be construed to, prohibit the City from participating in the defense of any claim, action, or proceeding, provided that applicant shall remain obligated to pay any attorney's fees incurred by City for in-house or outside counsel, which may be chosen by the City in the exercise of its sole discretion.

    D. In the event the City determines that it is necessary to take legal action to enforce any of the provisions of these conditions, and such legal action is taken, the applicant shall be required to pay any and all costs of such legal action, including reasonable attorney's fees, incurred by the City, even if the matter is not prosecuted to a final judgment or is amicably resolved or settled, unless the City should waive said fees or any part thereof. The foregoing may not apply if the permittee prevails in the enforcement proceeding.

13. The construction superintendent shall notify all crews of construction work hours on the project site. In accordance with the City's adopted Noise Ordinance, no work shall take place between the hours of 8:00 p.m. and 7:00 a.m. The construction work hours shall be noted on the improvement plans and are generally accepted as 7:00 a.m. to 8:00 p.m. Monday through Friday. Saturday work requires prior consumence by City. No work shall take place on Sunday or any legal or City observed holiday. The definition of "work" shall include running or idling of equipment.

14. Once permits have been issued to commence work on the Improvements, it is the owner's responsibility to diligently pursue completion per all conditions, requirements and as represented on the approved plans. Reasonable progress shall occur on a continual basis until completion to the satisfaction of the Community Development Director. Work shall not be discontinued for a period exceeding 30 days, without acceptable cause, with the intent to have the project completed in a timely fashion so as to prevent a potential blight from partially completed construction.

15. Minor changes to this planned development permit amendment may be approved by the Community Development Director or designee subject to Zoning Ordinance Chapter 24.570. Any substantial change will require the filing of an Application for Amendment and shall be subject to review by the Planning Commission.

16. This approval does not constitute a building permit or authorization to begin any construction. An appropriate permit issued by the Inspection Services Division must be obtained prior to constructing, enlarging, moving, converting, or demolishing any building or structure within the City.

17. Once permits have been issued to commence work on the Improvements, it is the applicant/owner's responsibility to diligently pursue completion per all conditions and requirements and as represented on the approved plans. Reasonable progress shall occur on a continual basis until completion to the satisfaction of the Community Development Director. Work shall not be discontinued for a period exceeding 30 days, without acceptable cause, with the intent to have the project completed in a timely fashion so as to prevent a potential blight from partially completed construction.

18. All approvals are subject to and dependent upon the applicant complying with all applicable ordinances, codes, regulations, or adopted policies. In the event the City determines that it is necessary to take legal action to enforce any of the provisions of these conditions, and such legal action is taken, the applicant shall be required to pay any and all costs of such legal action, including reasonable attorney's fees, incurred by the City, even if the matter is not prosecuted to a final

10. This Planning Commission Resolution, in its entirety as adopted, shall be included in the initial plan check submittal that is submitted to the Building and Safety Division. The Resolution shall be copied directly onto plan sheets and included as part of the plans that are submitted for plan check. The Resolution shall remain a part of the plans throughout the plan check process and shall be part of the plans for which building permits are issued.

11. Unless the project is inaugurated no later than 12 months after this approval is granted and is diligently pursued thereafter, this approval shall expire by operation of law without any further action by the decision-making authority if the use authorized by such use permit is not commenced on or before the time limit specified in the conditions of approval of such planned development permit amendment, or if no time is specified, on or before one year after the date such amendment was approved. The Community Development Director may, pursuant to Chapter 24.505, grant no more than one administrative extension of such time limit if the approved plans have not changed and if there has been no substantial change in the circumstances of the surrounding vicinity, provided the initial 12-month period has not already expired. Additionally, the Planning Commission may extend such time limit, for a good cause, before its expiration, pursuant to section 24.525.140.

12. Unless construction is commenced not later than 12 months after this effective approval is granted and is diligently pursued thereafter, this approval will be subject to revocation pursuant to the City's Zoning Regulations. However, if the approved plot plan, elevation plans, and adjacent areas are unchanged (except as allowed under Municipal Code Section 24.505), the Community Development Director may grant one additional 12 month extension of time for start of construction, provided the initial 12 month period has not already expired.

    Start of construction is defined as:

    a. All zoning and related approvals are effective;
    b. All required building and grading permits for the project have been issued; and
    c. The "foundation inspection" and "concrete slab or underfloor inspection" as defined in the California Building Code, Section 110, have been made and received approval from the Inspection Services Division, i.e., all trenches must be excavated, forms erected, and all materials for the foundation delivered on the job and all in-slab or underfloor building service equipment, conduit, piping accessories and other ancillary equipment items must be in place. The California Building Code is the currently adopted edition commencing with Section 12.110.010 of the City of San Buenaventura Municipal Code. Nothing in this definition shall be construed to alter the applicable legal standards for determining when vested property rights to complete the project have arisen.

2. The location of all existing buildings, parking areas, and other existing facilities or features shall be located and maintained substantially as shown on the plans for PDA-7-16-36124, dated September 13, 2017, Exhibits "A" through "GG".

3. The project authorized by PD-198 is only modified to the extent identified in the attached plans labeled Case No. PDA-7-16-36124 dated September 13, 2017, Exhibits "A" through "GG" .

4. Condition 37 of PD-198, authorized by Planning Commission Resolution No. 5004, is replaced in its entirety and amended as follows:

    37. The requirement for Architectural Theme Criteria for this shopping center is rescinded. ~~A formal written set of Architectural Theme Criteria including, but not limited to, building theme or style, types of building materials, roof types, colors, and a total sign program for the overall site shall be reviewed and approved by the Planning Commission and the Architectural Review Board prior to issuance of any building permits for the site.~~

8. All remaining provisions of PD-198 approved by the Planning Commission on August 12, 1980 shall remain in full force and effect.

6. The applicant shall create colors and materials plan sheet noting the Design Review Committee's confirmed colors and materials for approval by the Planning Division and submitted to the Building and Safety Division for building permit issuance.

7. All materials and colors used in construction and all landscape materials shall be as shown on the plans and approved by the Design Review Committee. Any deviation will require the express approval of the Design Review Committee, and once constructed or installed, all improvements shall be maintained in accordance with the approved plans and in a manner acceptable to the Community Development Director. This includes landscape materials being maintained in a healthy and weed-free manner at all times.

8. Compliance with and execution of all conditions listed herein shall be necessary prior to obtaining final building inspection clearance and/or prior to obtaining any occupancy clearance, unless stated otherwise herein. Deviation from this requirement shall be permitted only by written consent of the Community Development Director.

9. Within 15 days hereof, the applicant and property owner shall file with the Secretary of the Planning Commission written acknowledgment of the conditions stated herein on forms provided by the Planning Division, and all public notices posted onsite are to be removed.

The proposed project will not result in an unusual circumstance that would cause it to have a significant effect on the environment because it will be located within a built-out shopping center at the intersection of a busy commercial area (Arundell District) and will not alter the commercial characteristics of the property or surrounding uses. Therefore, the project will not have a significant effect on the environment due to unusual circumstances.

(d) Scenic Highways. A categorical exemption shall not be used for a project which may result in damage to scenic resources, including but not limited to, trees, historic buildings, rock outcroppings, or similar resources, within a highway officially designated as a state scenic highway. This does not apply to improvements, which are required as mitigation by an adopted negative declaration or certified EIR.

The project is not located in or adjacent to a state designated scenic highway.

(e) Hazardous Waste Sites. A categorical exemption shall not be used for a project located on a site, which is included on any list compiled pursuant to Section 65962.5 of the Government Code.

The proposed project site is not included on any list compiled pursuant to Section 65962.5 of the Government Code.

(f) Historical Resources. A categorical exemption shall not be used for a project, which may cause a substantial adverse change in the significance of a historical resource.

The project site does not contain an existing or potential landmark, point of interest, or historic resource, and it is not located within or adjacent to an existing, proposed, or potential Historic District. The shopping center was built from 1982 to 1984, meaning that no structures over 40 years old are located on site. Therefore, the proposed project will not cause a substantial adverse change in the significance of a historical resource.

SECTION 4: Based on the above findings, Planned Development Permit Amendment PDA-7-16-36124 is HEREBY APPROVED, as set forth in Sections 1 through 3 above, subject to the following conditions:

Planning Division

1. The approval is granted only for the land as described in the application and any attachments thereto, and as shown on the plans labeled PDA-7-16-36124, dated September 13, 2017, Exhibits "A" through "GG", attached hereto and incorporated herein by reference.

through inadequately maintained treatment devices into the public storm drain system, are violation of State regulations and the City's Municipal Code.

40. Per Part 4, Section F.6(d) of MS4 Permit, prior to issuance of Certificate of Occupancy, to ensure proper installation, all LID measures, structural BMP's, treatment control BMP's, post construction BMP's and all landscaped areas shall be inspected by Public Works Inspector. The Certificate of Occupancy shall not be issued if the project site does not have fully functioning LID measures, structural BMP's, treatment control BMP's, post construction BMP's and/or other landscaped areas have bare ground. 6309.

41. Prior to issuance of grading permit, the project Civil Engineer shall certify that they have reviewed the Landscape Plans (both private and public) and that all structural BMP's, treatment control BMP's, post construction BMP's comply with the MS4 requirements. This certification shall be on the civil construction plans. 6310.

Land Development: Utilities

42. All utility plans shall be coordinated with the respective utility companies and shall be submitted for review and approval by the City Engineer along with other Improvement plans required for the project. 6402.

43. All above ground utility locations shall be reviewed and approved prior to grading plan approval. All above ground utility structures shall be located and screened in accordance with the City Council adopted Guidelines for the Screening of above Ground Utility Structures. 6403.

Land Development: Parks

44. The Applicant/Developer shall submit landscape and irrigation plans for both public and private areas prepared by a landscape architect licensed in the State of California and shall include all self-certifications necessary to show compliance with the State's AB 1881 - Model Water Efficient Landscape Ordinance. 6503.

Ventura Water: Standard Sewer

45. The current City Engineering Design Standards and the City Standard Construction Details shall be followed for design requirements. Please contact Land Development for a copy of the latest approved set.

46. All on-site sanitary sewer mains and appurtenances shall be a private sewer system, owned and maintained by the Homeowners' Association as provided for in the CC&R's. Connection to the City Sewer System shall be made to a City manhole within the public right-of-way as approved by the Ventura Water

measures. The BMPs shall be designed specifically for the treatment of the pollutants of concern as identified in the referenced documents. 6308.

The Applicant/Developer shall submit a site plan with design of the BMPs, including treatment calculations, for review with grading/improvement plans. No permits will be issued prior to approval of the final design of the BMPs and all BMPs shall be constructed prior to project acceptance.

First consideration shall be to control pollutants, pollutant loads, and runoff volume emanating from impervious surfaces through infiltration, storage for reuse, evaporation, or bioretention by reducing the percentage of Effective Impervious Area (EIA) to 5% or less of the total project area in accordance with the Technical Guidance Manual.

When a vegetated swale is used within public right of way or on private property, Amendment no. 1 to the Engineering design Standards, dated October 16, 2014 shall be followed. Landscape plans shall clearly delineate perimeter of vegetated swale and designate as permanent BMP. Copy of landscape plan shall be provided to Land Development Section for review and approval.

The Applicant/Developer shall also be responsible for developing and implementing a long-term Operation and Maintenance Plan for stormwater quality protection BMPs included in the project. The Operation and Maintenance Plan shall include the following:

- Operation procedures;
- Procedures for routine maintenance (e.g., debris removal, vegetation clearing);
- Procedures for corrective maintenance (e.g., parts replacement);
- Maintenance performance levels;
- Identification of the party responsible for operation and maintenance;
- Inspection and reporting requirements;
- Training of individuals responsible for maintenance.

The Applicant/Developer shall submit Draft Declaration of Covenants for review and approval as to form by the City Engineer and City Attorney to insure maintenance of all water quality BMPs included in the project. Applicant/Developer shall record declaration prior to issuance of certificate of occupancy. Illicit discharges, illicit connections, or stormwater discharges passing

Land Development: Grading

34. All grading shall be in accordance with the City Grading Ordinance and the latest revision thereto. When a grading permit is required, the rough grading for the lot shall be completed, certified by the Applicant/Developer's soil/geotechnical and civil engineers and accepted by the City Engineer prior to issuance of building permits. Certification shall be accompanied by Final Compaction Report. 6201.

Land Development: Drainage

35. Hydrology/Hydraulic design calculations, prepared by a Registered Civil Engineer, are required to be submitted with the site-grading plan. Calculations shall include determination of adequacy of the drainage system proposed and the adequacy of the existing downstream system before issuance of a grading permit. If capacity is not available in the existing system using the design criteria of the City, Ventura County Watershed Protection District, and Caltrans, then the Applicant/Developer shall submit plans for review and approval for new downstream drainage improvements OR provides an onsite retention system with adequate capacity for the additional flows prior to issuance of grading permit.

    Design and construction of the downstream system improvements shall be at the Applicant/Developer's expense, as approved by the City Engineer/and or respective agency. The construction of the downstream system shall be completed prior to occupancy. 6301.

36. No cross-lot drainage will be permitted unless approved by the City Engineer in which case the property owner must provide documents providing stormwater acceptance between the lots. 6302.

37. All drainage shall be directed away from structures and the drainage run-off shall be conveyed to a street and/or drainage system by non-erosive means. 6303.

38. The Applicant/Developer and Property Owner shall comply with the requirements of the Ventura Countywide Stormwater Quality Management Program (VCSQMP), National Pollutant Discharge Elimination System (NPDES) Permit No. CAS004002, applicable NPDES permits issued by the State of California Regional Water Quality Control Board including the State General Permit for Construction Activity, and the City of San Buenaventura Municipal Stormwater Code. 6307.

39. In addition to complying with the above listed stormwater requirements the Applicant/Developer shall comply with the Technical Guidance Manual for Stormwater Control Measures (available for download on the County's website at http://www.vcstormwater.org), to design and construct stormwater control

parking should be located along the natural desire lines of travel from the bikeways to the facility entrance, in well-lit areas visible from commercial storefronts and public areas. In the nature of a bicycle corral or racks; regardless of how the bicycle parking is provided, it shall be designed to provide two (2) points of contact on the bicycle, be supported upright, and cause no stress onto tires. All provided bicycle parking shall, at a minimum, allow both the frame and at least one wheel of the bike to be secured with a u-style lock.

Land Development: General

26. Grading and improvement plans required, including, but not limited to, street, water, sewer, and storm drain improvements shall be prepared by a Civil Engineer registered in the State of California. Said improvement plans shall be submitted to the City Engineer for review and comments and subsequent approval. 6001.

    Prior to commencement of work on the grading and improvement plans, Developer and his Civil Engineer shall attend a pre-design meeting with Land Development staff to become fully aware of the City's standards, requirements, processes and expectations..

29. Prior to issuance of any building permits, the Applicant/Developer shall pay sewer and water connection fees, parks and recreation facilities tax, traffic mitigation fee, service area parks mitigation fee, public park fee and all other applicable fees/taxes. 6002.

30. Concurrent with submitting any public improvement plans for plan checking, the Applicant/Developer's engineer shall submit a standard City of Ventura "Estimate of Cost" with a plan check fee in accordance with the City Municipal Code and current Fee Schedule. The approved estimate of cost shall be the basis for the plan check fee, inspection fee, and security for guaranteeing public improvements. 6003.

31. Any existing damaged or defaced curb, gutter, or sidewalk adjacent to project boundary shall be removed and replaced. 6006.

32. All utility plans shall be coordinated with the respective utility companies and submitted for review and approval by the City Engineer prior to issuance of a grading and/or encroachment permit. 6005.

33. No improvements shall be allowed within any existing easement, unless as approved by the utility easement owner and City Engineer. 6015.

20. All requirements of any law, ordinance, or regulation of the State, City of San Buenaventura, and any other governmental entity shall be complied with.

21. Approval is subject to the applicant paying all fees and assessments to the City of San Buenaventura, as required by the Municipal Code.

Planning Division Special

22. The project plans submitted to Building & Safety shall identify all bicycle parking locations with a minimum of 84 bicycle parking spaces, to be provided on site. Staff shall review all construction documents prior to building permit issuance to assure that the bicycle racks have been provided and is not in conflict with the applicable development standards for building in the Commercial Planned Development (C-P-D) Zone.

23. The project plans submitted to Building & Safety shall identify all carpool/vanpool parking locations with a minimum of 84 spaces, to be provided on site. Staff shall review all construction documents prior to building permit issuance to assure that the carpool/vanpool parking spaces has been provided and is not in conflict with the applicable development standards for building in the Commercial Planned Development (C-P-D) Zone.

Public Works Department – Traffic

24. Prior to the issuance of building permits, the applicable City Traffic Mitigation Fee shall be paid to the Inspection Services Division.

25. Prior to the issuance of building permits, the applicable County of Ventura traffic mitigation fees shall be paid directly to the County. A building permit will not be issued until the applicant has provided satisfactory evidence that the County fee has been paid.

26. Access to the site shall be through driveways per City Standard Plan No. 104, with a minimum width of 25 feet. The driveways shall be located along the property frontages per City Engineer's requirements.

Public Works Department – Bicycle Parking

27. The applicant shall submit a bicycle parking plan, per Municipal Code, to be reviewed and approved by the Chief Building Official, a Senior Transportation Engineer, and the Community Development Director (or his/her appointee). All bicycle parking shall comply with AASHTO, NACTO, or APBP standards, with regard to rack types, spacing, setbacks, installation surfaces, materials, hardware and signage, as permitted by the California Building Code. The bicycle

RASMUSSEN & ASSOCIATES
Architecture
Planning
Interiors
21 S. California Street
First Floor
Ventura, California 93001
(805) 648-1234

2018-01-16 PRELIMINARY SET
NOT FOR CONSTRUCTION

LICENSED ARCHITECT
LARRY RASMUSSEN
C-4848
REN. 9-30-17
STATE OF CALIFORNIA

Sheet Title: PLANNING CONDITIONS

Revisions	
R&A No:	A161305
Date:	10/18/17
Drawn:	R&A
Checked:	S.B.
Consult. No:	

RIVIERA SHOPPING CENTER
STARBUCKS COFFEE HOUSE

4710 TELEPHONE ROAD
VENTURA, CALIFORNIA 93003

Sheet No.
PC2

78. *Prior to Building and Safety submittal, Developer and his design team (architect and engineers)shall attend a preliminary Plan Check meeting with Building and Safety and Fire Department staff to become fully aware of the City's standards, requirements, plan check processes and expectation .Contact Yolanda Bundy for meeting coordination at (805)677-3963.*

79. All construction shall be designed and built in accordance with California Title 24 handicap accessibility standards. Appropriate details and specifications shall be incorporated into the plans and submitted at time of plan check.

80. Structural observation shall be required in accordance with California Building Code Chapter 17. The design professional shall provide the required observation, which shall be clearly specified on the approved plans.

81. This project or use shall meet all applicable requirements of State and local codes related to building safety, fire protection and hazardous materials in effect at time of permit application. The Building and Safety conditions are general in nature and are intended to indicate major requirements, but are not all-inclusive. The Building Official will meet with the applicant, at the applicant's convenience, to discuss the applicable requirements in more detail. The Building Official may be contacted at (805) 677-3963, 801 Poli Street, Ventura, CA 93001.

SECTION 8: The permit approval shall be subject to revocation if the applicant fails to comply with the conditions listed herein at any time. If, at any time, the Community Development Director or Planning Commission determine that there has been, or may be a violation of the findings or conditions of this approval, or of the Zoning Regulations, a public hearing may be held before the Planning Commission to review this approval pursuant to Zoning Regulation Chapter 34.570. At said hearing, the Planning Commission may add or modify conditions, recommend enforcement actions, or revoke the approval entirely, as necessary, to ensure compliance with these findings/conditions and the Zoning Regulations, and to provide for the health, safety, and general welfare of the community.

PASSED AND ADOPTED this 11th day of October, 2017.

Dave Ward, Secretary

Approved as to Form:
Gregory G. Diaz
City Attorney

10/4/17
Jennifer Coe
Assistant City Attorney

Attachment: Exhibit "A through GG"
A17-00405

70. Develop a Refuse and Recycling Operations and Management plan for approval from EJ Harrison and the City Environmental Services Staff. The Refuse and Recycling Operations and Management plan shall include at a minimum how the collection of refuse and recycling will be accomplished:

a) Number of trash/recycle bins.
b) Number of days of service from EJ Harrison.
c) Provide a description of outdoor site management (trash and recycle containers, sweeping, mopping, and removal of all trash from outdoor surfaces).
d) Include the following: "Adequate trash service shall be provided. No trash or recyclable materials shall be allowed to spill or accumulate on any surrounding surfaces. If at any time it is determined by inspection that trash/recycle is inadequate for this site, additional service shall be provided."
e) The Plan shall be signed by a responsible party.

Fire Department

71. Fire protection systems shall be installed for each structure as required per the California Fire Code, California Building Code and City of San Buenaventura Ordinance.

Building & Safety Division

72. TYPE OF CONSTRUCTION: Comply with current adopted building codes.

73. OCCUPANCY: Occupancy must comply with the requirements of current adopted building codes.

74. ACCESSIBILITY: Fully comply with all accessibility requirements of the current Building Code.

75. GREEN BUILDING CODE REQUIREMENTS: Fully comply with all requirements of the current Green Building Code.

76. Complete architectural plans and appropriate engineering calculations shall be prepared by a California Licensed Architect or Engineer and be submitted to Building and Safety for plan check and plan approval.

77. All building construction shall be designed in accordance with the City's currently adopted California Building Code, California Green Building Code, California Electric Code, California Plumbing and Mechanical Codes, California Energy Code and all other appropriate sections of the City Ordinance Code.

system to serve the subdivision. There shall be no distribution systems with dead ends created by the project. Looped systems to existing and/or new mains are to be provided as part of the design.

65. All on-site water mains and appurtenances shall be a private water system, owned and maintained by the property owner. A master meter shall be required on all mixed-use and multi-family/town house/apartment complexes; meter size will be based on the number of units served. Multi- unit buildings shall be equipped with sub meters and piping as required at the building owner's expense prior to the issuance of a certificate of occupancy. All sub meters will be owned, maintained, read and billed by the building owner or HOA.

66. The construction plans shall show proposed water service and meter locations for each lot. There shall be a separate water service for each lot. Water services shall not be located in driveways.

67. Phasing Plans for water utilities shall be submitted to Ventura Water for review and approval by the Ventura Water General Manager at least three weeks prior to the start of construction. All utilities shall be sufficient to support each phase and the phasing map shall show all proposed utilities for the entire project and any public improvements that will be constructed off-site that are necessary to serve each phase.

68. No private easements.

Environmental Services

69. Compliance with the Refuse and Recycling Enclosure Minimum Standards and Guidelines must be demonstrated on the plan materials for review and approval prior to Occupancy process or issuance of building permits, including the following:

a) Independent pedestrian access to the storage bin areas, if applicable;
   - Buffer zones between refuse/recycle storage areas;
   - Required number of recycle and refuse bins must meet the minimum standard for the proposed use.
   - Areas for Refuse/Recycle bin storage; end to end for easy pedestrian traffic access and removal of bins for disposal by EJ Harrison.
   - Demonstrate easy accessibility for the removal of the bins (in and out of the enclosures) to the area of pick up by EJ Harrison that does not hinder or block traffic (e.g. slope of drive way may be too steep for EJ Harrison driver to physically push the dumpsters to an accessible area for pick up).

56. Phasing Plans for sewer utilities shall be submitted to Ventura Water for review and approval by the Ventura Water General Manager at least three weeks prior to the start of construction. All utilities shall be sufficient to support each phase and the phasing map shall show all proposed utilities for the entire project and any public improvements that will be constructed off-site that are necessary to serve each phase.

57. No private easements.

Ventura Water: Standard Water

58. The City of San Buenaventura is implementing a Water Rights Dedication and Water Resource Net Zero Policy per Municipal Code Chapter 22.180. All projects are subject to compliance with the Policy, which includes implementation of conservation offsets, dedication of water rights, and/or payment of a Water Resource Net Zero Fee.

    Prior to Final Tract (Parcel) Map approval by the City, a grant deed dedicating to the City all water rights developed from the historic extraction of surface or ground water and the right to develop all water found or taken from under that portion of said property shall be submitted to the City. This grant deed is required to be recorded concurrently with the Final Tract (Parcel) Map. The Subdivider/Developer shall assist in the transfer of any allocations as required by a Basin Water master or other water authority

59. The current City Engineering Design Standards and the City Standard Construction Details shall be followed for design requirements.

60. Any wells and/or water production facilities on the site shall be abandoned or destroyed in a manner satisfactory to the Ventura Water General Manager and the County Resource Management Agency. A Ventura County Well Demolition Permit will be required prior to abandoning any wells.

61. A separate service is required for fire protection purposes. The fire service shall be equipped with approved backflow devices. Point of connection to the City water system shall be made only in location as approved by the Ventura Water General Manager.

62. There shall be no public water mains/services/meters within private streets, properties and private or public alleys.

63. There shall be no trees planted until water services are located. Minimum separation between trees and water mains or services is 6'.

64. The Applicant/Subdivider/Developer shall provide a looped water distribution

General Manager. The on-site private sanitary sewer mains shall converge into a private manhole on-site before connection to the public manhole within the public right-of-way. The Homeowners' Association shall be billed for the sewer service for these lots.

OR

A private common sewer agreement shall be prepared by the Subdivider/Developer and submitted for consideration and approval by the City Attorney and Ventura Water General Manager for any sewage drainage to any other private sewer system.

47. There shall be no public sewer mains, lift stations or other sewer facilities within private streets, properties and private or public alleys.

48. There shall be no trees planted until sewer laterals are marked on curbs. Minimum separation between trees and sewer mains and/or laterals is 10'.

49. The construction plans shall show proposed sewer lateral for each lot. There shall be a separate lateral for each lot. The Lots that have a second dwelling unit may have two (2) separate sewer laterals. New sewer laterals shall not be located in driveways. Laterals that are being abandoned must be cut and capped.

50. The Subdivider/Developer shall clean and CCTV all public sewer lines just prior to final inspection. The Subdivider/Developer shall clean and CCTV all public sewer lines per NASSCO/PACP Standards and 10% clear water flow within two (2) weeks prior to FINAL ACCEPTANCE of the public improvements.

51. Multiple unit housing complexes, on a single lot, shall be served by one private sewer lateral. This lateral shall connect to the public sewer main by a public manhole.

52. There shall be no more than 3 connections to a public manhole.

53. Point of connection to the City sewer system shall be made only to sewer mains in location as approved by the Ventura Water General Manager.

54. The Applicant/Subdivider/Developer shall provide the necessary backflow prevention control devices as required by Ventura Water.

55. All new sewer infrastructures shall be isolated with a physical barrier until the Ventura Water approves the new system and the development is ready for actual occupancy.

RASMUSSEN & ASSOCIATES
Architecture
Planning
Interiors
21 S. California Street
First Floor
Ventura, California 93001
(805) 648-1234

LICENSED ARCHITECT
DAVID P. RASMUSSEN
C-4848
REN. 9-30-17
STATE OF CALIFORNIA

2018-01-16 PRELIMINARY SET
NOT FOR CONSTRUCTION

Sheet Title: PLANNING CONDITIONS

Revisions	
R&A No:	A161305
Date:	10/18/17
Drawn:	R&A
Checked:	S.B.
Consult. No:	

RIVIERA SHOPPING CENTER
STARBUCKS COFFEE HOUSE

4770 TELEPHONE ROAD
VENTURA, CALIFORNIA 93003

Sheet No.
PC3

2016 CALIFORNIA GREEN BUILDING STANDARDS CODE
NONRESIDENTIAL MANDATORY MEASURES, SHEET 1

CHAPTER 5
NONRESIDENTIAL MANDATORY MEASURES

Division 5.1 – PLANNING AND DESIGN

SECTION 5.101
GENERAL

5.101.1 Scope. The provisions of this chapter outline planning, design and development methods that include environmentally responsible site selection, building design, building siting and development to protect, restore and enhance the environmental quality of the site and respect the integrity of adjacent properties.

SECTION 5.102
DEFINITIONS

5.102.1 Definitions. The following terms are defined in Chapter 2.

CUTOFF LUMINAIRES.

LOW-EMITTING AND FUEL EFFICIENT VEHICLES.

NEIGHBORHOOD ELECTRIC VEHICLE (NEV).

TENANT-OCCUPANTS.

VANPOOL VEHICLE.

ZEV.

SECTION 5.103
SITE SELECTION
(Reserved)

SECTION 5.104
SITE PRESERVATION
(Reserved)

SECTION 5.105
DECONSTRUCTION AND REUSE OF EXISTING STRUCTURES
(Reserved)

SECTION 5.106
SITE DEVELOPMENT

5.106.1 Storm water pollution prevention. Newly constructed projects and additions which disturb less than one acre of land shall prevent the pollution of stormwater runoff from the construction activities through one or more of the following measures:

5.106.1.1 Local ordinance. Comply with a lawfully enacted stormwater management and/or erosion control ordinance.

5.106.1.2 Best management practices (BMP). Prevent the loss of soil through wind or water erosion by implementing an effective combination of erosion and sediment control and good housekeeping BMP.

1. Soil loss BMP that should be considered for implementation as appropriate for each project include, but are not limited to, the following:
   a. Scheduling construction activity.
   b. Preservation of natural features, vegetation and soil.
   c. Drainage swales or lined ditches to control stormwater flow.
   d. Mulching or hydroseeding to stabilize disturbed soils.
   e. Erosion control to protect slopes.
   f. Protection of storm drain inlets (gravel bags or catch basin inserts).
   g. Perimeter sediment control (perimeter silt fence, fiber rolls).
   h. Sediment trap or sediment basin to retain sediment on site.
   i. Stabilized construction exits.
   j. Wind erosion control.
   k. Other soil loss BMP acceptable to the enforcing agency.
2. Good housekeeping BMP to manage construction equipment, materials and wastes that should be considered for implementation as appropriate for each project include, but are not limited to, the following:
   a. Material handling and waste management.
   b. Building materials stockpile management.
   c. Management of washout areas (concrete, paints, stucco, etc.).
   d. Control of vehicle/equipment fueling to contractor's staging area.
   e. Vehicle and equipment cleaning performed off site.
   f. Spill prevention and control.
   g. Other housekeeping BMP acceptable to the enforcing agency.

5.106.4 Bicycle parking. For buildings within the authority of California Building Standards Commission as specified in Section 103, comply with Section 5.106.4.1. For buildings within the authority of the Division of the State Architect pursuant to Section 105, comply with Section 5.106.4.2.

5.106.4.1 Bicycle parking. [BSC-CG] Comply with Sections 5.106.4.1.1 and 5.106.4.1.2; or meet the applicable local ordinance, whichever is stricter.

5.106.4.1.1 Short-term bicycle parking. If the new project or an addition or alteration is anticipated to generate visitor traffic, provide permanently anchored bicycle racks within 200 feet of the visitors' entrance, readily visible to passers-by, for 5 percent of new visitor motorized vehicle parking spaces being added, with a minimum of one two-bike capacity rack.

Exception: Additions or alterations which add nine or less visitor vehicular parking spaces.

5.106.4.1.2 Long-term bicycle parking. For new buildings with 10 or more tenant-occupants or for additions or alterations that add 10 or more tenant vehicular parking spaces, provide secure bicycle parking for 5 percent of the tenant vehicular parking spaces being added, with a minimum of one space. Acceptable parking facilities shall be convenient from the street and shall meet one of the following:

1. Covered, lockable enclosures with permanently anchored racks for bicycles;
2. Lockable bicycle rooms with permanently anchored racks; or
3. Lockable, permanently anchored bicycle lockers.

Note: Additional information on recommended bicycle accommodations may be obtained from Sacramento Area Bicycle Advocates.

5.106.4.2 Bicycle parking. [DSA-SS] For public schools and community colleges, comply with Sections 5.106.4.2.1 and 5.106.4.2.2.

5.106.4.2.1 Student bicycle parking. Provide permanently anchored bicycle racks conveniently accessed with a minimum of four two-bike capacity racks per new building.

5.106.4.2.2 Staff bicycle parking. Provide permanent, secure bicycle parking conveniently accessed with a minimum of two staff bicycle parking spaces per new building. Acceptable bicycle parking facilities shall be convenient from the street or staff parking area and shall meet one of the following:

1. Covered, lockable enclosures with permanently anchored racks for bicycles;
2. Lockable bicycle rooms with permanently anchored racks; or
3. Lockable, permanently anchored bicycle lockers.

5.106.5.2 Designated parking for clean air vehicles. In new projects or additions or alterations that add 10 or more vehicular parking spaces, provide designated parking for any combination of low-emitting, fuel-efficient and carpool/van pool vehicles as follows:

TABLE 5.106.5.2

TOTAL NUMBER OF PARKING SPACES	NUMBER OF REQUIRED SPACES
0–9	0
10–25	1
26–50	3
51–75	6
76–100	8
101–150	11
151–200	16
201 and over	At least 8 percent of total

5.106.5.2.1 Parking stall marking. Paint, in the paint used for stall striping, the following characters such that the lower edge of the last word aligns with the end of the stall striping and is visible beneath a parked vehicle:

CLEAN AIR/
VANPOOL/EV

Note: Vehicles bearing Clean Air Vehicle stickers from expired HOV lane programs may be considered eligible for designated parking spaces.

5.106.5.3 Electric vehicle (EV) charging. [N] Construction shall comply with Section 5.106.5.3.1 or Section 5.106.5.3.2 to facilitate future installation of electric vehicle supply equipment (EVSE). When EVSE(s) is/are installed, it shall be in accordance with the *California Building Code*, the *California Electrical Code* and as follows:

5.106.5.3.1 Single charging space requirements. [N] When only a single charging space is required per Table 5.106.5.3.3, a raceway is required to be installed at the time of construction and shall be installed in accordance with the *California Electrical Code*. Construction plans and specifications shall include, but are not limited to, the following:

1. The type and location of the EVSE.
2. A listed raceway capable of accommodating a 208/240-volt dedicated branch circuit.
3. The raceway shall not be less than trade size 1."
4. The raceway shall originate at a service panel or a subpanel serving the area, and shall terminate in close proximity to the proposed location of the charging equipment and into a listed suitable cabinet, box, enclosure or equivalent.
5. The service panel or subpanel shall have sufficient capacity to accommodate a minimum 40-ampere dedicated branch circuit for the future installation of the EVSE.

5.106.5.3.2 Multiple charging space requirements. [N] When multiple charging spaces are required per Table 5.106.5.3.3 raceway(s) is/are required to be installed at the time of construction and shall be installed in accordance with the *California Electrical Code*. Construction plans and specifications shall include, but are not limited to, the following:

1. The type and location of the EVSE.
2. The raceway(s) shall originate at a service panel or a subpanel(s) serving the area, and shall terminate in close proximity to the proposed location of the charging equipment and into listed suitable cabinet(s), box(es), enclosure(s) or equivalent.
3. Plan design shall be based upon 40-ampere minimum branch circuits.
4. Electrical calculations shall substantiate the design of the electrical system to include the rating of and demand and any on-site distribution transformers and have sufficient capacity to simultaneously charge all required EVs at its full rated amperage.
5. The service panel or subpanel(s) shall have sufficient capacity to accommodate the required number of dedicated branch circuit(s) for the future installation of the EVSE.

5.106.5.3.3 EV charging space calculation. [N] Table 5.106.5.3.3 shall be used to determine if single or multiple charging space requirements apply for the future installation of EVSE.

Exceptions: On a case-by-case basis where the local enforcing agency has determined EV charging and infrastructure is not feasible based upon one or more of the following conditions:

1. Where there is insufficient electrical supply.
2. Where there is evidence suitable to the local enforcing agency substantiating that additional local utility infrastructure design requirements, directly related to the implementation of Section 5.106.5.3, may adversely impact the construction cost of the project.

TABLE 5.106.5.3.3

TOTAL NUMBER OF ACTUAL PARKING SPACES	NUMBER OF REQUIRED EV CHARGING SPACES
0–9	1
10–25	2
26–50	4
51–75	6
76–100	8
101–150	11
151–200	16
201 and over	6 percent of total[1]

1. Calculation for spaces shall be rounded up to the nearest whole number.

5.106.5.3.4 [N] Identification. The service panel or subpanel(s) circuit directory shall identify the reserved overcurrent protective device space(s) for future EV charging as "EV CAPABLE". The raceway termination location shall be permanently and visibly marked as "EV CAPABLE."

5.106.5.3.5 [N] Future charging spaces qualify as designated parking as described in Section 5.106.5.2 Designated parking for clean air vehicles.

Notes:

1. The California Department of Transportation adopts and publishes the California Manual on Uniform Traffic Control Devices (California MUTCD) to provide uniform standards and specifications for all official traffic control devices in California. Zero Emission Vehicle Signs and Pavement Markings can be found in the New Policies & Directives number 13-01. www.dot.ca.gov/hq/traffops/policy/13-01.pdf.
2. See Vehicle Code Section 22511 for EV charging spaces signage in off-street parking facilities and for use of EV charging spaces.
3. The Governor's Office of Planning and Research published a Zero-Emission Vehicle Community Readiness Guidebook which provides helpful information for local governments, residents and businesses. www.opr.ca.gov/docs/ZEV_Guidebook.pdf.

5.106.8 Light pollution reduction. [N] Outdoor lighting systems shall be designed and installed to comply with the following:

1. The minimum requirements in the *California Energy Code* for Lighting Zones 1-4 as defined in Chapter 10 of the *California Administrative Code*; and
2. Backlight, Uplight and Glare (BUG) ratings as defined in IES TM-15-11; and
3. Allowable BUG ratings not exceeding those shown in Table 5.106.8, or Comply with a local ordinance lawfully enacted pursuant to Section 101.7, whichever is more stringent.

Exceptions: [N]

1. Luminaires that qualify as exceptions in Section 140.7 of the *California Energy Code*.
2. Emergency lighting.
3. Building facade meeting the requirements in Table 140.7-B of the *California Energy Code*, Part 6.
4. Custom lighting features as allowed by the local enforcing agency, as permitted by Section 101.8 Alternate materials, designs and methods of construction.

Note: [N] See also *California Building Code*, Chapter 12, Section 1205.6 for college campus lighting requirements for parking facilities and walkways.

5.106.10 Grading and paving. Construction plans shall indicate how site grading or a drainage system will manage all surface water flows to keep water from entering buildings. Examples of methods to manage surface water include, but are not limited to, the following:

1. Swales.
2. Water collection and disposal systems.
3. French drains.
4. Water retention gardens.
5. Other water measures which keep surface water away from buildings and aid in groundwater recharge.

Exception: Additions and alterations not altering the drainage path.

TABLE 5.106.8 [N]
MAXIMUM ALLOWABLE BACKLIGHT, UPLIGHT AND GLARE (BUG) RATINGS[1,2]

ALLOWABLE RATING	LIGHTING ZONE 1	LIGHTING ZONE 2	LIGHTING ZONE 3	LIGHTING ZONE 4
Maximum Allowable Backlight Rating[3]				
Luminaire greater than 2 mounting heights (MH) from property line	No Limit	No Limit	No Limit	No Limit
Luminaire back hemisphere is 1 – 2 MH from property line	B2	B3	B4	B4
Luminaire back hemisphere is 0.5 – 1 MH from property line	B1	B2	B3	B3
Luminaire back hemisphere is less than 0.5 MH from property line	B0	B0	B1	B2
Maximum Allowable Uplight Rating				
For area lighting[4]	U0	U0	U0	U0
For all other outdoor lighting, including decorative luminaires	U1	U2	U3	U4
Maximum Allowable Glare Rating[3]				
Luminaire greater than 2 MH from property line	G1	G2	G3	G4
Luminaire front hemisphere is 1 – 2 MH from property line	G0	G1	G1	G2
Luminaire front hemisphere is 0.5 – 1 MH from property line	G0	G0	G1	G1
Luminaire back hemisphere is less than 0.5 MH from property line	G0	G0	G0	G1

1. IESNA Lighting Zones 0 and 5 are not applicable; refer to Lighting Zones as defined in the *California Energy Code* and Chapter 10 of the *California Administrative Code*.
2. For property lines that abut public walkways, bikeways, plazas and parking lots, the property line may be considered to be 5 feet beyond the actual property line for purpose of determining compliance with this section. For property lines that abut public roadways and public transit corridors, the property line may be considered to be the centerline of the public roadway or public transit corridor for the purpose of determining compliance with this section.
3. If the nearest property line is less than or equal to two mounting heights from the back hemisphere of the luminaire distribution, the applicable reduced Backlight rating shall be met.
4. General lighting luminaires in areas such as outdoor parking, sales or storage lots shall meet these reduced ratings. Decorative luminaires located in these areas shall meet U-value limits for "all other outdoor lighting."
5. If the nearest property line is less than or equal to two mounting heights from the front hemisphere of the luminaire distribution, the applicable reduced Glare rating shall be met.

CHAPTER 5
NONRESIDENTIAL MANDATORY MEASURES

Division 5.2 – ENERGY EFFICIENCY

SECTION 5.201
GENERAL

5.201.1 Scope [BSC-CG], *California Energy Code* [DSASS]. For the purposes of mandatory energy efficiency standards in this code, the California Energy Commission will continue to adopt mandatory building standards.

CHAPTER 5
NONRESIDENTIAL MANDATORY MEASURES

Division 5.3 – WATER EFFICIENCY AND CONSERVATION SECTION

5.301
GENERAL

5.301.1 Scope. The provisions of this chapter shall establish the means of conserving water used indoors, outdoors and in wastewater conveyance.

SECTION 5.302
DEFINITIONS

5.302.1 Definitions. The following terms are defined in Chapter 2.

EVAPOTRANSPIRATION ADJUSTMENT FACTOR (ETAF) [DSA-SS]

FOOTPRINT AREA [DSA-SS]

GRAYWATER.

METERING FAUCET

MODEL WATER EFFICIENT LANDSCAPE ORDINANCE (MWELO).

POTABLE WATER.

RECYCLED WATER.

SPECIAL LANDSCAPE AREA (SLA). [DSA-SS]

SUBMETER.

SECTION 5.303
INDOOR WATER USE

5.303.1 Meters. Separate submeters or metering devices shall be installed for the uses described in Sections 5.303.1.1 and 5.303.1.2.

5.303.1.1 New buildings or additions in excess of 50,000 square feet. Separate submeters shall be installed as follows:

a. For each individual leased, rented, or other tenant space within the building projected to consume more than 100 gal/day (380 L/day), including, but not limited to, spaces used for laundry or cleaners, restaurant or food service, medical or dental office, laboratory, or beauty salon or barber shop.
b. Where separate submeters for individual building tenants are infeasible, for water supplied to the following subsystems:
   a. Makeup water for cooling towers where flow through is greater than 500 gpm (30 L/s).
   b. Makeup water for evaporative coolers greater than 6 gpm (0.04 L/s).
   c. Steam and hot-water boilers with energy input more than 500,000 Btu/h (147 kW).

5.303.1.2 Excess consumption. A separate submeter or metering device shall be provided for any tenant within a new building or within an addition that is projected to consume more than 1,000 gal/day.

5.303.2 Reserved.

5.303.3 Water conserving plumbing fixtures and fittings. Plumbing fixtures (water closets and urinals) and fittings (faucets and showerheads) shall comply with the following:

5.303.3.1 Water closets. The effective flush volume of all water closets shall not exceed 1.28 gallons per flush. Tank-type water closets shall be certified to the performance criteria of the U.S. EPA WaterSense Specification for Tank-Type Toilets.

Note: The effective flush volume of dual flush toilets is defined as the composite, average flush volume of two reduced flushes and one full flush.

5.303.3.2 Urinals.

5.303.3.2.1 Wall-mounted urinals. The effective flush volume of wall-mounted urinals shall not exceed 0.125 gallons per flush.

5.303.3.2.2 Floor-mounted urinals. The effective flush volume of floor-mounted or other urinals shall not exceed 0.5 gallons per flush.

5.303.3.3 Showerheads.

5.303.3.3.1 Single showerhead. Showerheads shall have a maximum flow rate of not more than 2.0 gallons per minute at 80 psi. Showerheads shall be certified to the performance criteria of the U.S. EPA WaterSense Specification for Showerheads.

5.303.3.3.2 Multiple showerheads serving one shower. When a shower is served by more than one showerhead, the combined flow rate of all showerheads and/or other shower outlets controlled by a single valve shall not exceed 2.0 gallons per minute at 80 psi, or the shower shall be designed to allow only one shower outlet to be in operation at a time.

Note: A hand-held shower shall be considered a showerhead.

5.303.3.4 Faucets and fountains.

5.303.3.4.1 Nonresidential lavatory faucets. Lavatory faucets shall have a maximum flow rate of not more than 0.5 gallons per minute at 60 psi.

5.303.3.4.2 Kitchen faucets. Kitchen faucets shall have a maximum flow rate of not more than 1.8 gallons per minute at 60 psi. Kitchen faucets may temporarily increase the flow above the maximum rate, but not to exceed 2.2 gallons per minute at 60 psi, and must default to a maximum flow rate of 1.8 gallons per minute at 60 psi.

5.303.3.4.3 Wash fountains. Wash fountains shall have a maximum flow rate of not more than 1.8 gallons per minute/20 [rim space (inches) at 60 psi].

5.303.3.4.4 Metering faucets. Metering faucets shall not deliver more than 0.20 gallons per cycle.

5.303.3.4.5 Metering faucets for wash fountains. Metering faucets for wash fountains shall have a maximum flow rate of not more than 0.20 gallons per cycle/20 [rim space (inches) at 60 psi].

Note: Where complying faucets are unavailable, aerators or other means may be used to achieve reduction.

5.303.4 Commercial kitchen equipment.

5.303.4.1 Food waste disposers. Disposers shall either modulate the use of water to no more than 1 gpm when the disposer is not in use (not actively grinding food waste/solids) or shall automatically shut off after no more than 10 minutes of inactivity. Disposers shall use no more than 8 gpm of water.

Note: This code section does not affect local jurisdiction authority to prohibit or require disposer installation.

5.303.5 Areas of addition or alteration. For those occupancies within the authority of the California Building Standards Commission as specified in Section 101, the provisions of Sections 5.303.3 and 5.303.4 shall apply to new fixtures in additions or areas of alteration to the building.

5.303.6 Standards for plumbing fixtures and fittings. Plumbing fixtures and fittings shall be installed in accordance with the *California Plumbing Code*, and shall meet the applicable standards referenced in Table 170.1 of the *California Plumbing Code* and in Chapter 6 of this code.

SECTION 5.304
OUTDOOR WATER USE

5.304.1 Scope. The provisions of Section 5.304, Outdoor Water Use reference the mandatory Model Water Efficiency Landscape Ordinance (MWELO) contained within Chapter 2.7, Division 2, Title 23, *California Code of Regulations*.

5.304.2 Outdoor water use in landscape areas equal to or greater than 500 square feet. When water is used for outdoor irrigation for new construction projects with an aggregate landscape area equal to or greater than 500 square feet requiring a building or landscape permit, plan check or design review, one of the following shall apply:

1. A local water efficient landscape ordinance that is, based on evidence in the record, at least as effective in conserving water as the updated model ordinance adopted by the Department of Water Resources (DWR) per Government Code Section 65595 (c).
2. The California Department of Water Resources Model Water Efficient Landscape Ordinance (MWELO) commencing with Section 490 of Chapter 2.7, Division 2, Title 23, *California Code of Regulations*.

5.304.3 Outdoor water use in rehabilitated landscape projects equal to or greater than 2,500 square feet. Rehabilitated landscape projects with an aggregate landscape area equal to or greater than 2,500 square feet requiring a building or landscape permit, plan check, or design review shall comply with Section 5.304.2, Item 1 or 2.

5.304.4 Outdoor water use in landscape areas of 2,500 square feet or less. Any project with an aggregate landscape area of 2,500 square feet or less may comply with the performance requirements of MWELO or conform to the prescriptive compliance measures contained in MWELO's Appendix D.

5.304.5 Graywater or rainwater use in landscape areas. For projects using treated or untreated graywater or rainwater captured on site, any lot or parcel within the project that has less than 2,500 square feet of landscape and meets the lot or parcel's landscape water requirement (Estimated Total Water Use) entirely with treated or untreated graywater or through stored rainwater captured on site is subject only to Appendix D Section (3).

Notes:

1. DWR's Model Water Efficient Landscape Ordinance, definitions and supporting documents are available at the following link: http://water.ca.gov/wateruseefficiency/landscapeordinance/
2. A water budget calculator is available at the following link: http://water.ca.gov/wateruseefficiency/landscapeordinance/
3. The MWELO prescriptive compliance measure Appendix D may be found at the following link: http://water.ca.gov/wateruseefficiency/landscapeordinance/. In addition, a copy of MWELO Appendix D may be found in Chapter 8 of this code.

5.304.6 Outdoor potable water use in landscape areas [DSA-SS]. For public schools and community colleges, landscape projects as described in Sections 5.304.6.1 and 5.304.6.2 shall comply with the California Department of Water Resources Model Water Efficient Landscape Ordinance (MWELO) commencing with Section 490 of Chapter 2.7, Division 2, Title 23, *California Code of Regulations*, except that the evapotranspiration adjustment factor (ETAF) shall be 0.65 with an additional water allowance for special landscape areas (SLA) of 0.35.

Exception: Any project with an aggregate landscape area of 2,500 square feet or less may comply with the prescriptive measures contained in Appendix D of the MWELO.

5.304.6.1 Newly constructed landscapes. [DSA-SS] New construction projects with an aggregate landscape area equal to or greater than 500 square feet.

5.304.6.2 Rehabilitated landscapes. [DSA-SS] Rehabilitated landscape projects with an aggregate landscape area equal to or greater than 1,200 square feet.

SECTION 5.305
WATER REUSE SYSTEMS
(Reserved)

CHAPTER 5
NONRESIDENTIAL MANDATORY MEASURES

Division 5.4 – MATERIAL CONSERVATION AND RESOURCE EFFICIENCY

SECTION 5.401
GENERAL

5.401.1 Scope. The provisions of this chapter shall outline means of achieving material conservation and resource efficiency through protection of buildings from exterior moisture, construction waste diversion, employment of techniques to reduce pollution through recycling of materials, and building commissioning or testing and adjusting.

SECTION 5.402
DEFINITIONS

5.402.1 Definitions. The following terms are defined in Chapter 2.

ADJUST.

BALANCE.

BUILDING COMMISSIONING.

ORGANIC WASTE.

TEST.

SECTION 5.403
FOUNDATION SYSTEMS
(Reserved)

SECTION 5.404
EFFICIENT FRAMING TECHNIQUES
(Reserved)

SECTION 5.405
MATERIAL SOURCES
(Reserved)

SECTION 5.406
ENHANCED DURABILITY AND REDUCED MAINTENANCE
(Reserved)

SECTION 5.407
WATER RESISTANCE AND MOISTURE MANAGEMENT

5.407.1 Weather protection. Provide a weather-resistant exterior wall and foundation envelope as required by *California Building Code* Section 1403.2 (Weather Protection) and *California Energy Code* Section 150, (Mandatory Features and Devices), manufacturer's installation instructions or local ordinance, whichever is more stringent.

5.407.2 Moisture control. Employ moisture control measures by the following methods.

5.407.2.1 Sprinklers. Design and maintain landscape irrigation systems to prevent spray on structures.

5.407.2.2 Entries and openings. Design exterior entries and/or openings subject to foot traffic or wind-driven rain to prevent water intrusion into buildings as follows:

5.407.2.2.1 Exterior door protection. Primary exterior entries shall be covered to prevent water intrusion by using nonabsorbent floor and wall finishes within at least 2 feet around and perpendicular to such openings plus at least one of the following:

1. An installed awning at least 4 feet in depth.
2. The door is protected by a roof overhang at least 4 feet in depth.
3. The door is recessed at least 4 feet.
4. Other methods which provide equivalent protection.

5.407.2.2.2 Flashing. Install flashings integrated with a drainage plane.

SECTION 5.408
CONSTRUCTION WASTE REDUCTION, DISPOSAL AND RECYCLING

5.408.1 Construction waste management. Recycle and/or salvage for reuse a minimum of 65 percent of the nonhazardous construction and demolition waste in accordance with Section 5.408.1.1, 5.408.1.2 or 5.408.1.3; or meet a local construction and demolition waste management ordinance, whichever is more stringent.

5.408.1.1 Construction waste management plan. Where a local jurisdiction does not have a construction and demolition waste management ordinance that is more stringent, submit a construction waste management plan that

1. Identifies the construction and demolition waste materials to be diverted from disposal by efficient usage, recycling, reuse on the project or salvage for future use or sale.
2. Determines if construction and demolition waste materials will be sorted on-site (source-separated) or bulk mixed (single stream).
3. Identifies diversion facilities where construction and demolition waste material collected will be taken.
4. Specifies that the amount of construction and demolition waste materials diverted shall be calculated by weight or volume, but not by both.

5.408.1.2 Waste management company. Utilize a waste management company that can provide verifiable documentation that the percentage of construction and demolition waste material diverted from the landfill complies with this section.

Note: The owner or contractor shall make the determination if the construction and demolition waste material will be diverted by a waste management company.

Exceptions to Sections 5.408.1.1 and 5.408.1.2:

1. Excavated soil and land-clearing debris.
2. Alternate waste reduction methods developed by working with local agencies if diversion or recycle facilities capable of compliance with this item do not exist.
3. Demolition waste meeting local ordinance or calculated in consideration of local recycling facilities and markets.

5.408.1.3 Waste stream reduction alternative. The combined weight of new construction disposal that does not exceed two pounds per square foot of building area may be deemed to meet the 65 percent minimum requirement as approved by the enforcing agency.

5.408.1.4 Documentation. Documentation shall be provided to the enforcing agency which demonstrates compliance with Sections 5.408.1.1 through 5.408.1.3. The waste management plan shall be updated as necessary and shall be accessible during construction for examination by the enforcing agency.

Notes:

1. Sample forms found in "A Guide to the California Green Building Standards Code (Nonresidential)" located at http://www.bsc.ca.gov/Home/CALGreen.aspx may be used to assist in documenting compliance with the waste management plan.
2. Mixed construction and demolition debris (C&D) processors can be located at the California Department of Resources Recycling and Recovery (CalRecycle).

5.408.2 Universal waste. [A] Additions and alterations to a building or tenant space that meet the scoping provisions in Section 301.3 for nonresidential additions and alterations, shall require verification that Universal Waste items such as fluorescent lamps and ballast and mercury containing thermostats as well as other California prohibited Universal Waste materials are disposed of properly and are diverted from landfills. A list of prohibited Universal Waste materials shall be included in the construction documents.

Note: Refer to the Universal Waste Rule link at: http://www.dtsc.ca.gov/LawsRegsPolicies/Regs/upload/OEARA_REGS_UWR_FinalText.pdf

5.408.3 Excavated soil and land clearing debris. 100 percent of trees, stumps, rocks and associated vegetation and soils resulting primarily from land clearing shall be reused or recycled. For a phased project, such material may be stockpiled on site until the storage site is developed.

Exception: Reuse, either on-or off-site, of vegetation or soil contaminated by disease or pest infestation.

Notes:

1. If contamination by disease or pest infestation is suspected, contact the County Agricultural Commissioner and follow its direction for recycling or disposal of the material. (www.cdfa.ca.gov/exec/county/county_contacts.html)
2. For a map of known pest and/or disease quarantine zones, consult with the California Department of Food and Agriculture. (www.cdfa.ca.gov)

SECTION 5.409
LIFE CYCLE ASSESSMENT
(Reserved)

SECTION 5.410
BUILDING MAINTENANCE AND OPERATION

5.410.1 Recycling by occupants. Provide readily accessible areas that serve the entire building and are identified for the depositing, storage and collection of non-hazardous materials for recycling, including (at a minimum) paper, corrugated cardboard, glass, plastics, organic waste, and metals or meet a lawfully enacted local recycling ordinance, if more restrictive.

Exception: Rural jurisdictions that meet and apply for the exemption in Public Resources Code 42649.82 (a)(2)(A) et seq. shall also be exempt from the organic waste portion of this section.

5.410.1.1 Additions. All additions conducted within a 12-month period undertakings or multiple permits, resulting in an increase of 30 percent or more in floor area, shall provide recycling areas on site.

Exception: Additions within a tenant space resulting in less than a 30-percent increase in the tenant space floor area.

5.410.1.2 Sample ordinance. Space allocation for recycling areas shall comply with Chapter 18, Part 3, Division 30 of the *Public Resources Code*. Chapter 18 is known as the California Solid Waste Reuse and Recycling Access Act of 1991 (Act).

Note: A sample ordinance for use by local agencies may be found in Appendix A of the document at the CalRecycle's web site.

5.410.2 Commissioning. [N] For new buildings 10,000 square feet and over, building commissioning shall be included in the design and construction processes of the building project to verify that the building systems and components meet the owner's or owner representative's project requirements. Commissioning shall be performed in accordance with this section by trained personnel with experience on projects of comparable size and complexity. All occupancies other than I-occupancies and L-occupancies shall comply with the *California Energy Code* as prescribed in *California Energy Code* Section 120.8. For I-occupancies that are not regulated by OSHPD or for I-occupancies and L-occupancies that are not regulated by the *California Energy Code* Section 100.0 Scope, all requirements in Sections 5.410.2 through 5.410.2.6 shall apply. Commissioning requirements shall include:

1. Owner's or owner representative's project requirements.
2. Basis of design.
3. Commissioning measures shown in the construction documents.
4. Commissioning plan.
5. Functional performance testing.
6. Documentation and training.
7. Commissioning report.

Exceptions:

1. Unconditioned warehouses of any size.
2. Areas less than 10,000 square feet used for offices or other conditioned accessory spaces within unconditioned warehouses.
3. Tenant improvements less than 10,000 square feet as described in Section 303.1.1.
4. Open parking garages of any size, or open parking garage areas, of any size, within a structure.

Note: For the purposes of this section, unconditioned shall mean a building, area, or room which does not provide heating and or air conditioning.

Informational Notes:

1. IAS AC 476 is an accreditation criteria for organizations providing training and/or certification of commissioning personnel. AC 476 is available to the Authority Having Jurisdiction as a reference for qualifications of commissioning personnel. AC 476 does not certify individuals to conduct functional performance tests or to adjust and balance systems.
2. Functional performance testing for heating, ventilation, air conditioning systems and lighting controls must be performed in compliance with the *California Energy Code*.

5.410.2.1 Owner's or Owner representative's Project Requirements (OPR). [N] The expectations and requirements of the building appropriate to its phase shall be documented before the design phase of the project begins. This documentation shall include the following:

1. Environmental and sustainability goals.
2. Energy efficiency goals.
3. Indoor environmental quality requirements.
4. Project program, including facility functions and hours of operation, and need for after hours operation.
5. Equipment and systems expectations.
6. Building occupant and operation and maintenance (O&M) personnel expectations.

5.410.2.2 Basis of Design (BOD). [N] A written explanation of how the design of the building systems meets the OPR shall be completed at the design phase of the building project. The Basis of Design document shall cover the following systems:

1. Heating, ventilation, air conditioning (HVAC) systems and controls.
2. Indoor lighting system and controls.
3. Water heating system.
4. Renewable energy systems.
5. Landscape irrigation systems.
6. Water reuse systems.

5.410.2.3 Commissioning plan. [N] Prior to permit issuance a commissioning plan shall be completed to document how the project will be commissioned. The commissioning plan shall include the following:

1. General project information.
2. Commissioning goals.
3. Systems to be commissioned. Plans to test systems and components shall include:
   a. An explanation of the original design intent.
   b. Equipment and systems to be tested, including the extent of tests.
   c. Functions to be tested.
   d. Conditions under which the test shall be performed.
   e. Measurable criteria for acceptable performance.
4. Commissioning team information.
5. Commissioning process activities, schedules and responsibilities.

Plans for the completion of commissioning shall be included.

5.410.2.4 Functional performance testing. [N] Functional performance tests shall demonstrate the correct installation and operation of each component, system and system- to-system interface in accordance with the approved plans and specifications. Functional performance testing reports shall contain information addressing each of the building components tested, the testing methods utilized, and include any readings and adjustments made.

5.410.2.5 Documentation and training. [N] A systems manual and systems operations training are required, including Occupational Safety and Health Act (OSHA) requirements in *California Code of Regulations* (CCR), Title 8, Section 5142, and other related regulations.

5.410.2.5.1 Systems manual. [N] Documentation of the operational aspects of the building shall be completed within the systems manual and delivered to the building owner or representative. The systems manual shall include the following:

1. Site information, including facility description, history and current requirements.
2. Site contact information.
3. Basic operations and maintenance, including general site operating

RASMUSSEN & ASSOCIATES
Architecture
Planning
Interiors
2018-01-16 PRELIMINARY SET
NOT FOR CONSTRUCTION
21 S. California Street
Suite 400
Ventura, California 93001
(805) 648-1234
LICENSED ARCHITECT RASMUSSEN C-4848 REN. 9-30-17 STATE OF CALIFORNIA

Revisions	
R&A No:	A161305
Date:	10/18/17
Drawn:	L.T.
Checked:	S.B.
Consult. No:	

Sheet Title: GREEN BUILDING STANDARD CODE

RIVIERA SHOPPING CENTER
STARBUCKS COFFEE HOUSE
4710 TELEPHONE ROAD
VENTURA, CALIFORNIA 93003

Sheet No.
GB1

2016 CALIFORNIA GREEN BUILDING STANDARDS CODE
NONRESIDENTIAL MANDATORY MEASURES, SHEET 2

procedures, basic troubleshooting, recommended maintenance requirements, site events log.
4. Major systems.
5. Site equipment inventory and maintenance notes.
6. A copy of verifications required by the enforcing agency or this code.
7. Other resources and documentation, if applicable.

5.410.2.6.2 Systems operations training. [N] A program for training of the appropriate maintenance staff for each equipment type and/or system shall be developed and documented in the commissioning report and shall include the following:
1. System/equipment overview (what it is, what it does and with what other systems and/or equipment it interfaces).
2. Review and demonstration of servicing/preventive maintenance.
3. Review of the information in the systems manual.
4. Review of the record drawings on the system/equipment.

5.410.2.6.3 Commissioning report. [N] A report of commissioning process activities undertaken through the design and construction phases of the building project shall be completed and provided to the owner or representative.

5.410.4 Testing and adjusting. Testing and adjusting of systems shall be required for new buildings less than 10,000 square feet or new systems to serve an addition or alteration subject to Section 303.1.

5.410.4.1 (Reserved)

5.410.4.2 Systems. Develop a written plan of procedures for testing and adjusting systems. Systems to be included for testing and adjusting shall include, as applicable to the project:
1. HVAC systems and controls.
2. Indoor and outdoor lighting and controls.
3. Water heating systems.
4. Renewable energy systems.
5. Landscape irrigation systems.
6. Water reuse systems.

5.410.4.3 Procedures. Perform testing and adjusting procedures in accordance with manufacturer's specifications and applicable standards on each system.

5.410.4.3.1 HVAC balancing. In addition to testing and adjusting, before a new space-conditioning system serving a building or space is operated for normal use, balance the system in accordance with the procedures defined by the Testing Adjusting and Balancing Bureau National Standards; the National Environmental Balancing Bureau Procedural Standards; Associated Air Balance Council National Standards or as approved by the enforcing agency.

5.410.4.4 Reporting. After completion of testing, adjusting and balancing, provide a final report of testing signed by the individual responsible for performing these services.

5.410.4.5 Operation and maintenance (O & M) manual. Provide the building owner or representative with detailed operating and maintenance instructions and copies of guaranties/warranties for each system. O & M instructions shall be consistent with OSHA requirements in CCR, Title 8, Section 5142, and other related regulations.

5.410.4.5.1 Inspections and reports. Include a copy of all inspection verifications and reports required by the enforcing agency.

CHAPTER 5
NONRESIDENTIAL MANDATORY MEASURES

Division 5.5 – ENVIRONMENTAL QUALITY

SECTION 5.501
GENERAL

5.501.1 Scope. The provisions of this chapter shall outline means of reducing the quantity of air contaminants that are odorous, irritating, and/or harmful to the comfort and wellbeing of a building's installers, occupants and neighbors.

SECTION 5.502
DEFINITIONS

5.502.1 Definitions. The following terms are defined in Chapter 2.

ARTERIAL HIGHWAY.

A-WEIGHTED SOUND LEVEL (dBA).

1 BTU/HOUR.

COMMUNITY NOISE EQUIVALENT LEVEL (CNEL).

COMPOSITE WOOD PRODUCTS.

DAY-NIGHT AVERAGE SOUND LEVEL (L_{dn}).

DECIBEL (dB).

ENERGY EQUIVALENT (NOISE) LEVEL (L_{eq}).

EXPRESSWAY.

FREEWAY.

GLOBAL WARMING POTENTIAL (GWP).

GLOBAL WARMING POTENTIAL VALUE (GWP VALUE).

HIGH-GWP REFRIGERANT.

LONG RADIUS ELBOW.

LOW-GWP REFRIGERANT.

MERV.

MAXIMUM INCREMENTAL REACTIVITY (MIR).

PRODUCT-WEIGHTED MIR (PWMIR).

PSIG.

REACTIVE ORGANIC COMPOUND (ROC).

SCHRADER ACCESS VALVES.

SHORT RADIUS ELBOW.

SUPERMARKET.

VOC.

SECTION 5.503
FIREPLACES

5.503.1 Fireplaces. Install only a direct-vent sealed-combustion gas or sealed wood-burning fireplace, or a sealed woodstove or pellet stove, and refer to residential requirements in the *California Energy Code*, Title 24, Part 6, Subchapter 7, Section 150. Woodstoves, pellet stoves and fireplaces shall comply with applicable local ordinances.

5.503.1.1 Woodstoves. Woodstove and pellet stoves shall comply with U.S. EPA New Source Performance Standards (NSPS) emission limits as applicable, and shall have a permanent label indicating they are certified to meet the emission limits.

SECTION 5.504
POLLUTANT CONTROL

5.504.1 Temporary ventilation. The permanent HVAC system shall only be used during construction if necessary to condition the building or areas of addition or alteration within the required temperature range for material and equipment installation. If the HVAC system is used during construction, use return air filters with a Minimum Efficiency Reporting Value (MERV) of 8, based on ASHRAE 52.2-1999, or an average efficiency of 30 percent based on ASHRAE 52.1-1992. Replace all filters immediately prior to occupancy, or, if the building is occupied during alteration, at the conclusion of construction.

5.504.3 Covering of duct openings and protection of mechanical equipment during construction. At the time of rough installation and during storage on the construction site until final startup of the heating, cooling and ventilating equipment, all duct and other related air distribution component openings shall be covered with tape, plastic, sheetmetal or other methods acceptable to the enforcing agency to reduce the amount of dust, water and debris which may enter the system.

5.504.4 Finish material pollutant control. Finish materials shall comply with Sections 5.504.4.1 through 5.504.4.6.

5.504.4.1 Adhesives, sealants and caulks. Adhesives, sealants, and caulks used on the project shall meet the requirements of the following standards:
1. Adhesives, adhesive bonding primers, adhesive primers, sealants, sealant primers and caulks shall comply with local or regional air pollution control or air quality management district rules where applicable, or SCAQMD Rule 1168 VOC limits, as shown in Tables 5.504.4.1 and 5.504.4.2. Such products also shall comply with the Rule 1168 prohibition on the use of certain toxic compounds (chloroform, ethylene dichloride, methylene chloride, perchloroethylene and trichloroethylene), except for aerosol products as specified in subsection 2, below.
2. Aerosol adhesives, and smaller unit sizes of adhesives, and sealant or caulking compounds (in units of product, less packaging, which do not weigh more than one pound and do not consist of more than 16 fluid ounces) shall comply with statewide VOC standards and other requirements, including prohibitions on use of certain toxic compounds, of *California Code of Regulations*, Title 17, commencing with Section 94507.

TABLE 5.504.4.1
ADHESIVE VOC LIMIT[1,2]
Less Water and Less Exempt Compounds in Grams Per Liter

ARCHITECTURAL APPLICATIONS	CURRENT VOC LIMIT
Indoor carpet adhesives	50
Carpet pad adhesives	50
Outdoor carpet adhesives	150
Wood flooring adhesive	100
Rubber floor adhesives	60
Subfloor adhesives	50
Ceramic tile adhesives	65
VCT and asphalt tile adhesives	50
Drywall and panel adhesives	50
Cove base adhesives	50
Multipurpose construction adhesives	70
Structural glazing adhesives	100
Single-ply roof membrane adhesives	250
Other adhesive not specifically listed	50
SPECIALTY APPLICATIONS	
PVC welding	510
CPVC welding	490
ABS welding	325
Plastic cement welding	250
Adhesive primer for plastic	550
Contact adhesive	80
Special purpose contact adhesive	250
Structural wood member adhesive	140
Top and trim adhesive	250
SUBSTRATE SPECIFIC APPLICATIONS	
Metal to metal	30
Plastic foams	50
Porous material (except wood)	50
Wood	30
Fiberglass	80

1. If an adhesive is used to bond dissimilar substrates together the adhesive with the highest VOC content shall be allowed.
2. For additional information regarding methods to measure the VOC content specified in this table, see South Coast Air Quality Management District Rule 1168, http://www.arb.ca.gov/DRDB/SC/CURHTML/R1168.PDF.

TABLE 5.504.4.2
SEALANT VOC LIMIT
Less Water and Less Exempt Compounds in Grams per Liter

SEALANTS	CURRENT VOC LIMIT
Architectural	250
Marine deck	760
Nonmembrane roof	300
Roadway	250
Single-ply roof membrane	450
Other	420
SEALANT PRIMERS	
Architectural Nonporous Porous	 250 775
Modified bituminous	500
Marine deck	760
Other	750

Note: For additional information regarding methods to measure the VOC content specified in these tables, see South Coast Air Quality Management District Rule 1168.

5.504.4.3 Paints and coatings. Architectural paints and coatings shall comply with VOC limits in Table 1 of the ARB Architectural Coatings Suggested Control Measure, as shown in Table 5.504.4.3, unless more stringent local limits apply. The VOC content limit for coatings that do not meet the definitions for the specialty coatings categories listed in Table 5.504.4.3 shall be determined by classifying the coating as a Flat, Nonflat or Nonflat-High Gloss coating, based on its gloss, as defined in Subsections 4.21, 4.36 and 4.37 of the 2007 California Air Resources Board Suggested Control Measure, and the corresponding Flat, Nonflat or Nonflat-High Gloss VOC limit in Table 5.504.4.3 shall apply.

5.504.4.3.1 Aerosol paints and coatings. Aerosol paints and coatings shall meet the PWMIR Limits for ROC in Section 94522(a)(3) and other requirements, including prohibitions on use of certain toxic compounds and ozone depleting substances, in Sections 94522(c)(2) and (d)(2) of *California Code of Regulations*, Title 17, commencing with Section 94520; and in areas under the jurisdiction of the Bay Area Air Quality Management District additionally comply with the percent VOC by weight of product limits of Regulation 8 Rule 49.

5.504.4.3.2 Verification. Verification of compliance with this section shall be provided at the request of the enforcing agency. Documentation may include, but is not limited to, the following:
1. Manufacturer's product specification
2. Field verification of on-site product containers

TABLE 5.504.4.3
VOC CONTENT LIMITS FOR ARCHITECTURAL COATINGS[1, 2, 3]
Grams of VOC per Liter of Coating,
Less Water and Less Exempt Compounds

COATING CATEGORY	CURENT LIMIT
Flat coatings	50
Nonflat coatings	100
Nonflat-high gloss coatings	150
SPECIALTY COATINGS	
Aluminum roof coatings	400
Basement specialty coatings	400
Bituminous roof coatings	50
Bituminous roof primers	350
Bond breakers	350
Concrete curing compounds	350
Concrete/masonry sealers	100
Driveway sealers	50
Dry fog coatings	150
Faux finishing coatings	350
Fire resistive coatings	350
Floor coatings	100
Form-release compounds	250
Graphic arts coatings (sign paints)	500
High temperature coatings	420
Industrial maintenance coatings	250
Low solids coatings[3]	120
Magnesite cement coatings	450
Mastic texture coatings	100
Metallic pigmented coatings	500
Multicolor coatings	250
Pretreatment wash primers	420
Primers, sealers, and undercoaters	100
Reactive penetrating sealers	350
Recycled coatings	250
Roof coatings	50
Rust preventative coatings	250
Shellacs Clear Opaque	 730 550
Specialty primers, sealers and undercoaters	100
Stains	250
Stone consolidants	450
Swimming pool coatings	340
Traffic marking coatings	100
Tub and tile refinish coatings	420
Waterproofing membranes	250
Wood coatings	275
Wood preservatives	350
Zinc-rich primers	340

1. Grams of VOC per liter of coating, including water and including exempt compounds.
2. The specified limits remain in effect unless revised limits are listed in subsequent columns in the table.
3. Values in this table are derived from those specified by the California Air Resources Board, Architectural Coatings Suggested Control Measure, February 1, 2008. More information is available from the Air Resources Board.

5.504.4.4 Carpet systems. All carpet installed in the building interior shall meet at least one of the following testing and product requirements:
1. Carpet and Rug Institute's Green Label Plus Program;
2. Compliant with the VOC-emission limits and testing requirements specified in the California Department of Public Health Standard Method for the Testing and Evaluation of Volatile Organic Chemical Emissions from Indoor Sources Using Environmental Chambers, Version 1.1, February 2010 (also known as CDPH Standard Method V1.1, or *Specification 01350*);
3. NSF/ANSI 140 at the Gold level or higher;
4. Scientific Certifications Systems Sustainable Choice; or
5. Compliant with the Collaborative for High Performance Schools California (CA-CHPS) Criteria Interpretation for EQ 7.0 and EQ 7.1 (formerly EQ 2.2) dated July 2012 and listed in the CHPS High Performance Product Database.

5.504.4.4.1 Carpet cushion. All carpet cushion installed in the building interior shall meet the requirements of the Carpet and Rug Institute's Green Label program.

5.504.4.4.2 Carpet adhesive. All carpet adhesive shall meet the requirements of Table 5.504.4.1.

5.504.4.5 Composite wood products. Hardwood plywood, particleboard and medium density fiberboard composite wood products used on the interior or exterior of the building shall meet the requirements for formaldehyde as specified in ARB's Air Toxics Control Measure (ATCM) for Composite Wood (17 CCR 93120 et seq.) Those materials not exempted under the ATCM must meet the specified emission limits, as shown in Table 5.504.4.5.

5.504.4.5.1 Early compliance. Reserved.

5.504.4.5.3 Documentation. Verification of compliance with this section shall be provided as requested by the enforcing agency. Documentation shall include at least one of the following:
1. Product certifications and specifications.
2. Chain of custody certifications.
3. Product labeled and invoiced as meeting the Composite Wood Products regulation (see CCR, Title 17, Section 93120, et seq.).
4. Exterior grade products marked as meeting the PS-1 or PS-2 standards of the Engineered Wood Association, the Australian AS/NZS 2269 or European 636 3S standards.
5. Other methods acceptable to the enforcing agency.

TABLE 5.504.4.5
FORMALDEHYDE LIMITS[1]
Maximum Formaldehyde Emissions in Parts per Million

PRODUCT	CURRENT LIMIT
Hardwood plywood veneer core	0.05
Hardwood plywood composite core	0.05
Particleboard	0.09
Medium density fiberboard	0.11
Thin medium density fiberboard[2]	0.13

1. Values in this table are derived from those specified by the California Air Resources Board, Air Toxics Control Measure for Composite Wood as tested in accordance with ASTM E1333. For additional information, see California *Code of Regulations*, Title 17, Sections 93120 through 93120.12.
2. Thin medium density fiberboard has a maximum thickness of 5/16 inch (8 mm).

5.504.4.6 Resilient flooring systems. For 80 percent of floor area receiving resilient flooring, installed resilient flooring shall meet at least one of the following:
1. Certified under the Resilient Floor Covering Institute (RFCI) FloorScore program;
2. Compliant with the VOC-emission limits and testing requirements specified in the California Department of Public Health's 2010 Standard Method for the Testing and Evaluation Chambers, Version 1.1, February 2010;
3. Compliant with the Collaborative for High Performance Schools California (CA-CHPS) Criteria Interpretation for EQ 7.0 and EQ 7.1 (formerly EQ 2.2) dated July 2012 and listed in the CHPS High Performance Product Database; or
4. Products certified under UL GREENGUARD Gold (formerly the Greenguard Children's & Schools Program).

5.504.4.6.1 Verification of compliance. Documentation shall be provided verifying that resilient flooring materials meet the pollutant emission limits.

5.504.5.3 Filters. In mechanically ventilated buildings, provide regularly occupied areas of the building with air filtration media for outside and return air that provides at least a Minimum Efficiency Reporting Value (MERV) of 8. MERV 8 filters shall be installed prior to occupancy, and recommendations for maintenance with filters of the same value shall be included in the operation and maintenance manual.

Exceptions:
1. An ASHRAE 10-percent to 15-percent efficiency filter shall be permitted for an HVAC unit meeting the 2013 *California Energy Code* having 60,000 Btu/h or less capacity per fan coil, if the energy use of the air delivery system is 0.4 W/cfm or less at design air flow.
2. Existing mechanical equipment.

5.504.5.3.1 Labeling. Installed filters shall be clearly labeled by the manufacturer indicating the MERV rating.

5.504.7 Environmental tobacco smoke (ETS) control. Where outdoor areas are provided for smoking, prohibit smoking within 25 feet of building entries, outdoor air intakes and operable windows and within the building as already prohibited by other laws or regulations; or as enforced by ordinances, regulations or policies of any city, county, city and county, California Community College, campus of the California State University, or campus of the University of California, whichever are more stringent. When ordinances, regulations or policies are not in place, post signage to inform building occupants of the prohibitions.

SECTION 5.505
INDOOR MOISTURE CONTROL

5.505.1 Indoor moisture control. Buildings shall meet or exceed the provisions of *California Building Code*, CCR, Title 24, Part 2, Sections 1203 (Ventilation) and Chapter 14 (Exterior Walls). For additional measures not applicable to low-rise residential occupancies, see Section 5.407.2 of this code.

SECTION 5.506
INDOOR AIR QUALITY

5.506.1 Outside air delivery. For mechanically or naturally ventilated spaces in buildings, meet the minimum requirements of Section 120.1 (Requirements For Ventilation) of the 2013 *California Energy Code*, or the applicable local code, whichever is more stringent, and Division 1, Chapter 4 of CCR, Title 8.

5.506.2 Carbon dioxide (CO2) monitoring. For buildings or additions equipped with demand control ventilation, CO2 sensors and ventilation controls shall be specified and installed in accordance with the requirements of the 2013 *California Energy Code*, Section 120(c)(4).

SECTION 5.507
ENVIRONMENTAL COMFORT

5.507.4 Acoustical control. Employ building assemblies and components with Sound Transmission Class (STC) values determined in accordance with ASTM E90 and ASTM E413 or Outdoor-Indoor Sound Transmission Class (OITC) determined in accordance with ASTM E1332, using either the prescriptive or performance method in Section 5.507.4.1 or 5.507.4.2.

Exception: Buildings with few or no occupants or where occupants are not likely to be affected by exterior noise, as determined by the enforcement authority, such as factories, stadiums, storage, enclosed parking structures and utility buildings.

Exception: [DSA-SS] For public schools and community colleges, the requirements of this section and all subsections apply only to new construction.

5.507.4.1 Exterior noise transmission, prescriptive method. Wall and roof-ceiling assemblies exposed to the noise source making up the building or addition envelope or altered envelope shall meet a composite STC rating of at least 50 or a composite OITC rating of no less than 40, with exterior windows of a minimum STC of 40 or OITC of 30 in the following locations:
1. Within the 65 CNEL noise contour of an airport.

   Exceptions:
   1. L_{dn} or CNEL for military airports shall be determined by the facility Air Installation Compatible Land Use Zone (AICUZ) plan.
   2. L_{dn} or CNEL for other airports and heliports for which a land use plan has not been developed shall be determined by the local general plan noise element.
2. Within the 65 CNEL or L_{dn} noise contour of a freeway or expressway, railroad, industrial source or fixed-guideway source as determined by the Noise Element of the General Plan.

5.507.4.1.1 Noise exposure where noise contours are not readily available. Buildings exposed to a noise level of 65 dB L_{eq}-1-hr during any hour of operation shall have building, addition or alteration exterior wall and roof-ceiling assemblies exposed to the noise source meeting a composite STC rating of at least 45 (or OITC 35), with exterior windows of a minimum STC of 40 (or OITC 30).

5.507.4.2 Performance method. For buildings located as defined in Section 5.507.4.1 or 5.507.4.1.1, wall and roofceiling assemblies exposed to the noise source making up the building or addition envelope or altered envelope shall be constructed to provide an interior noise environment attributable to exterior sources that does not exceed an hourly equivalent noise level (L_{eq}-1Hr) of 50 dBA in occupied areas during any hour of operation.

5.507.4.2.1 Site features. Exterior features such as sound walls or earth berms may be utilized as appropriate to the building, addition or alteration project to mitigate sound migration to the interior.

5.507.4.2.2 Documentation of compliance. An acoustical analysis documenting complying interior sound levels shall be prepared by personnel approved by the architect or engineer of record.

5.507.4.3 Interior sound transmission. Wall and floorceiling assemblies separating tenant spaces and tenant spaces and public places shall have an STC of at least 40.

Note: Examples of assemblies and their various STC ratings may be found at the California Office of Noise Control: http://www.toolbase.org/PDF/CaseStudies/stc_icc_ratings.pdf.

SECTION 5.508
OUTDOOR AIR QUALITY

5.508.1 Ozone depletion and greenhouse gas reductions. Installations of HVAC, refrigeration and fire suppression equipment shall comply with Sections 5.508.1.1 and 5.508.1.2.

5.508.1.1 Chlorofluorocarbons (CFCs). Install HVAC, refrigeration and fire suppression equipment that do not contain CFCs.

5.508.1.2 Halons. Install HVAC, refrigeration and fire suppression equipment that do not contain Halons.

5.508.2 Supermarket refrigerant leak reduction. New commercial refrigeration systems shall comply with the provisions of this section when installed in retail food stores 8,000 square feet or more conditioned area, and that utilize either refrigerated display cases, or walk-in coolers or freezers connected to remote compressor units or condensing units. The leak reduction measures apply to refrigeration systems containing high-global-warming potential (high-GWP) refrigerants with a GWP of 150 or greater. New refrigeration systems include both new facilities and the replacement of existing refrigeration systems in existing facilities.

Exception: Refrigeration systems containing low-global warming potential (low-GWP) refrigerant with a GWP value less than 150 are not subject to this section. Low-GWP refrigerants are nonozone-depleting refrigerants that include ammonia, carbon dioxide (CO2), and potentially other refrigerants.

5.508.2.1 Refrigerant piping. Piping compliant with the *California Mechanical Code* shall be installed to be accessible for leak protection and repairs. Piping runs using threaded pipe, copper tubing with an outside diameter (OD) less than 1/4 inch, flared tubing connections and short radius elbows shall not be used in refrigerant systems except as noted below.

5.508.2.1.1 Threaded pipe. Threaded connections are permitted at the compressor rack.

5.508.2.1.2 Copper pipe. Copper tubing with an OD less than 1/4 inch may be used in systems with a refrigerant charge of 5 pounds or less.

5.508.2.1.2.1 Anchorage. One-fourth-inch OD tubing shall be securely clamped to a rigid base to keep vibration levels below 8 mils.

5.508.2.1.3 Flared tubing connections. Double-flared tubing connections may be used for pressure controls, valve pilot lines and oil.

Exception: Single-flared tubing connections may be used with a multiring seal coated with industrial sealant suitable for use with refrigerants and tightened in accordance with manufacturer's recommendations.

5.508.2.1.4 Elbows. Short radius elbows are only permitted where space limitations prohibit use of long radius elbows.

5.508.2.2 Valves. Valves and fittings shall comply with the *California Mechanical Code* and as follows.

5.508.2.2.1 Pressure relief valves. For vessels containing high-GWP refrigerant, a rupture disc shall be installed between the outlet of the vessel and the inlet of the pressure relief valve.

5.508.2.2.1.1 Pressure detection. A pressure gauge, pressure transducer or other device shall be installed in the space between the rupture disc and the relief valve inlet to indicate a disc rupture or discharge of the relief valve.

5.508.2.2.2 Access valves. Only Schrader access valves with a brass or steel body are permitted for use.

5.508.2.2.2.1 Valve caps. For systems with a refrigerant charge of 5 pounds or more, valve caps shall be brass or steel and not plastic.

5.508.2.2.2.2 Seal caps. If designed for it, the cap shall have a neoprene O-ring in place.

5.508.2.2.2.3 Chain retainers. Chain tethers to fit over the stem are required for valves designed to have seal caps.

Exception: Valves with seal caps that are not removed from the valve during stem operation.

5.508.2.3 Refrigerated service cases. Refrigerated service cases holding food products containing vinegar and salt shall have evaporator coils of corrosion-resistant material, such as stainless steel, or be coated to prevent corrosion from these substances.

5.508.2.3.1 Coil coating. Consideration shall be given to the heat transfer efficiency of coil coating to maximize energy efficiency.

5.508.2.4 Refrigerant receivers. Refrigerant receivers with capacities greater than 200 pounds shall be fitted with a device that indicates the level of refrigerant in the receiver.

5.508.2.5 Pressure testing. The system shall be pressure tested during installation prior to evacuation and charging.

5.508.2.5.1 Minimum pressure. The system shall be charged with regulated dry nitrogen and appropriate tracer gas to bring system pressure up to 300 psig minimum.

5.508.2.5.2 Leaks. Check the system for leaks, repair any leaks, and retest for pressure using the same gauge.

5.508.2.5.3 Allowable pressure change. The system shall stand, unaltered, for 24 hours with no more than a +/- one pound pressure change from 300 psig, measured with the same gauge.

5.508.2.6 Evacuation. The system shall be evacuated after pressure testing and prior to charging.

5.508.2.6.1 First vacuum. Pull a system vacuum down to at least 2000 microns (+/- 50 microns), and hold for 30 minutes.

5.508.2.6.2 Second vacuum. Pull a second system vacuum to a minimum of 500 microns and hold for 30 minutes.

5.508.2.6.3 Third vacuum. Pull a third vacuum down to a minimum of 300 microns, and hold for 24 hours with a maximum drift of 100 microns over a 24-hour period.

RASMUSSEN & ASSOCIATES
Architecture
Planning
Interiors
2018-01-16 PRELIMINARY SET
NOT FOR CONSTRUCTION
21 S. California Street
First Floor
Ventura, California 93001
(805) 648-1234
LICENSED ARCHITECT RASMUSSEN C-4848 REN. 9-30-17 STATE OF CALIFORNIA

Sheet Title: GREEN BUILDING STANDARD CODE

Revisions	
R&A No:	A161305
Date:	10/18/17
Drawn:	L.T.
Checked:	S.B.
Consult. No:	

RIVIERA SHOPPING CENTER
STARBUCKS COFFEE HOUSE
4710 TELEPHONE ROAD
VENTURA, CALIFORNIA 93003

Sheet No.
GB2

Structural General Notes

APPLIES TO STRUCTURAL DRAWINGS ONLY

STEEL

1. Wide flange "W" shapes shall conform to ASTM A992 Grade 50, unless specifically specified elsewhere on the plans. "S", "M", "HP", and channels are to conform to ASTM A572, grade 50. Plates, angles, and misc. steel sections shall conform to ASTM A36.
2. Anchor bolts and threaded studs (hooked, headed, and threaded anchor rods): conform to ASTM F1554 unless noted otherwise on the Plans.
3. High strength bolts used in steel to steel connection: conform to ASTM A325N. Unless pre-tensioned or friction type connections are specified, tighten bolts requiring the full effort of an ironworker with an ordinary spud wrench.
4. Pipe columns: conform to ASTM A-53, grade B.
5. Tube and circular steel sections (HSS): conform to ASTM A-500, grade B Fy=46KSI

CONCRETE ADHESIVE ~ RETROFIT APPLICATIONS

1. Drill the diameter of the hole 1/8" larger than the bolt or rebar to be inserted in the hole.
2. Drill to the depth shown on the Drawings.
3. Blow out holes to remove all dust and particles.
4. Use a high strength, high bond, non-shrink concrete adhesive. Approved manufacturers are Hilti (Hilti HIT-RE 500-SD, ICC #ESR-2322), Simpson (SET, ICC #ESR-1772 and 2508), or ET ICC #ESR-4945. Install in conformance to the manufacturer's recommendations.

NOTIFICATION

Notify the Structural Engineer 48 hours before the following times:

1. Foundation excavations.
2. Concrete pours.
3. When rough framing is completed and prior to start of finish work.
4. Prior to covering any plywood sheathing nailing.
5. Prior to covering any shear wall holdown anchors.

STRUCTURAL OBSERVATION

1. The owner shall employ the structural engineer of record to perform structural observations as defined in CBC Section 1704 for the following items:
   A. Foundation reinforcing and embedded items.
   B. Rough framing for conformance with the construction documents including all diaphragm & shear wall nailing & connectors

DESIGN PARAMETERS

1. Risk Category – II
2. Design Category – E
3. S_s – 2.418, S_1 – 0.963
4. S_{DS} – 1.452, S_{D1}- 1.542
5. S_{MS} – 2.176, S_{M1} – 2.311
6. Fa – 0.90, Fv – 2.40
7. Site Class – E
8. Seismic Importance Factor - 1.0
9. SFRS – Plywood Shear Walls
10. R – 6.5
11. Equivalent Lateral Force Procedure
12. Cs - .16 ASD
13. Design Base Shear = 14.2 kips
14. Max. wind speed = 110 mph
15. Wind Design per Alternate Heights Method CBC 2016 1609.6
16. Kz = .58, Kzt = 1.0
17. Wind Exposure - B
18. Wind Base Shear Worse Case = 14.0 kips [Seismic governs]

TIMBER

1. Framing and sheathing grades are as follows:

Joists and rafters	Doug Fir No. 2
4x & 6x beams/headers	Doug Fir No. 1 or better
Wall studs	Doug Fir No. 2
Blocking, stripping, & misc	Doug Fir No. 3
Plywood and OSB	APA sheathing rated,Structural 1, Exposure 1

2. For minimum nailing per California Building Code, see typical detail sheet.
3. Anchor non-bearing interior stud walls on concrete slabs with 3/8" diameter x 6" anchor bolts at 4'-0" o.c. or .145" diameter powder driven pins with 1" space powder driven anchors at 32" o.c., and a maximum of 9" from ends. Use a minimum of 2 fasteners per place. Use low velocity DN fasteners by HILTI (ICC#EST-2269), or 1524 fasteners by Ramset (ICC#EST-1799), or other approved equal (ICC reports are required).
4. Provide minimum anchorage of bearing walls and exterior walls with 5/8" diameter x 12" anchor bolts at 4'-0" o.c. with a bolt within 12" from the end of each piece.
5. Drill holes in wood for bolts 1/16" larger than the nominal size of the bolt, unless noted otherwise on the Drawings.
6. Provide all bolts with standard cut washers under heads and/or nuts where in contact with wood.
7. Where stud wall terminates at a concrete or masonry wall, fasten the last stud to the wall with 3/8" diameter x 6" long bolts at the top, bottom, and mid-height of the stud. Maximum vertical spacing of anchors shall be 6'-0".
8. Pre-drill lag bolt holes as recommended by CBC standards and screw bolts into place.
9. Stagger splices in upper and lower plates at the top of stud walls at least 4'-0".
10. Solid block all 2x joists and rafters at points of bearing. Where the joist or rafter span exceeds eight (8) feet, provide wood cross-bridging, not less than 2" x 3" nominal, metal cross-bridging of equal strength, or solid blocking between joists. Cross-bridging or blocking may be omitted for roof and ceiling joists 8" and less in depth, unless noted otherwise on the Plans.
11. Provide on plyclip between each joist at all unblocked edges of plywood sheathing. T&G plywood may be used throughout as an alternate to using plyclips.
12. Where joists or rafter spacing exceeds 24", provide T&G plywood or block all edges with 2x4 flat with Simpson "Z" clip each end.
13. Minimum dimension of any plywood sheet is to be 24" and the minimum area is to be 8 square feet. Smaller dimensioned sheets may be used only if all edges are solid blocked and edge nailed.
14. Provide 1/8" gap at all adjoining plywood panel edges.
15. Machine applied nailing: Demonstrate satisfactory installation on the job. Nailing tools used for diaphragm and shear wall sheathing attachment must have adjustable depth control features. It is not sufficient to control over-driving by adjusting air pressure. The Structural Engineer will review machine nailing to confirm continued satisfactory performance. Nails shall not penetrate the outer plywood ply no more than if the nail was installed with a hammer. If more than 20% of the nails around the perimeter of any panel are over-driven by up to 1/8", one new nail for every two over-driven nails shall be added (repair per APA report No. T94-9). Any two nails over-driven by more than 1/8" shall have an additional nail added.
16. All timber connectors are to be galvanized, or painted with corrosion resistant polymer paint.
17. All sheet metal framing connectors shown on the Plans are to be Strong-Tie connectors as manufactured by the Simpson Co. or equal. Unless noted otherwise on the Plans, install connectors with the size and number of bolts as recommended by the manufacturer in the latest catalog.
18. Face nail 2x6 T&G with 2-16d to each support, each board.
19. Members exposed to view: Select for best appearance available in grade specified, free of heart center rings, checks, and splits. Grade stamps exposed to view will not be acceptable. Remove all stains or gouges prior to installation.
20. Use Douglas Fir pressure impregnated lumber for sill plates resting on or against concrete or masonry and at other exterior locations. Use a Wolman CCA-C product or approved equal. When pressure treated lumber is in contact with steel connectors, the pressure treatment compound shall be no more corrosive than CCA-A.
21. Fasteners in contact with preservative-treated wood shall be of hot-dipped zinc-coated galvanized steel, stainless steel, silicon bronze or copper. Fasteners other than nails, timber rivets, wood screws, and lag screws shall be permitted to be of mechanically deposited zinc-coated steel with coating weights in accordance with ASTM B 695, Class 55 minimum. Connectors that are used in exterior applications and in contact with preservative-treated wood shall have coating types and weights in accordance with the treated wood or connector manufacturer's recommendations. In the absence of manufacturer's recommendations, a minimum of ASTM A 653, type G185 zinc-coated galvanized steel, or equivalent, shall be used.
    Exception: Plain carbon steel fasteners in SBX/DOT and zinc borate preservative treated wood in an interior, dry environment shall be permitted.

LAMINATED VENEER LUMBER (LVL) AND PARALLEL STRAND LUMBER (PSL)

1. Paralam and Microlam designations on the Drawings are those by Weyerhaeuser. Other manufacturers' joists which are equal to those of Weyerhaeuser are acceptable with the review and approval of the Structural Engineer at an additional cost to the contractor.
2. Multiple built-up microlam sections shall be nailed or bolted together per specifications provided by Weyerhaeuser.
3. All products shall conform to National Evaluation Service Inc. (NES) report no. NER-125 and NER-292 and to ICC#ESR-1387.
4. Parallam beams to be 2.0E.
5. Microlam beams to be 2.0E.

GENERAL

1. All materials and workmanship are subject to the review of the Architect and Structural Engineer.
2. Report any and all discrepancies, ambiguities, unclear items or items that are subject to more than one interpretation, on the Drawings and/or Specifications to the Structural Engineer for clarification before proceeding with Work.
3. All Work done under this contract is to comply with the 2016 edition of the California Building Code.
4. Design and install all temporary bracing and shoring to ensure the safety of the Work until it is in its completed form. When required by law, employ a Civil Engineer to design shoring, bracing, and installation plans for structural items.
5. Verify all dimensions prior to starting Work. The Architect and Structural Engineer are to be notified of any discrepancies or inconsistencies. Check and coordinate all dimensions. See architectural Drawings for dimensions and non-structural items not shown on these Plans. Do not scale the Drawings to obtain dimensions.
6. All scaffolding and shoring is to comply with the rules and regulations of the Industrial Safety Commission of the State of California.
7. The Structural Engineer will provide only periodic observation of the Work.
8. Fees or costs associated with the redesign or modification of these Plans by the Architect or Structural Engineer as a result of deviation by the Contractor from the Plans and Specifications, or due to errors, faulty materials or faulty workmanship, is to be paid to the Structural Engineer by the Contractor.
9. The Contractor is required to assume sole and complete responsibility for job site conditions during the course of construction of the project, including safety of all persons and property. This requirement applies continuously and is not limited to normal working hours. The Contractor further agrees to defend, indemnify and hold harmless the Structural Engineer from any and all liability, real or alleged, in connection with the performance of Work of this project, excepting liability arising from the sole negligence of the Structural Engineer.
10. Neither the professional activities nor the presence of the Structural Engineer at the construction site relieves the Contractor of his obligation, duties and responsibilities for construction means, methods, sequences, techniques and procedures necessary for the Contractor to complete the Work in accordance with the Plans and Specifications in a manner to ensure the health and safety of persons who enter the construction site.
11. Any difference between the existing construction as observed in the field and as shown on the Drawings is to be reported to the Structural Engineer before proceeding with Work.
12. Bidders must visit the building site and familiarize themselves with the existing conditions. Discrepancies or deletions must be brought to the attention of the Architect and Structural Engineer before bid date for correction.

EXCAVATING, GRADING, AND FILLING

1. Notify the Geotechnical Engineer when clearing and demolition commence.
2. Notify the governmental agencies having jurisdiction over the project prior to grading commencing. Make all necessary arrangements for their inspection.
3. The existing ground surface in the building and surface improvement areas should be prepared for construction by removing existing structures, improvements, vegetation, large roots, debris, and other deleterious material. Any undocumented fill soils should be completely removed and replaced as compacted fill. Any existing utilities that will not remain in service should be removed.
4. A geotechnical investigation report has been prepared by Moore Twining Associates, INC. dated 8/2/16 (revised 2/8/17) report number E75208.02-01. Earth and foundation Work is to be done in compliance with the recommendations of this report. A copy of the soils investigation is available at the Architect's office.

FOUNDATIONS

1. Extend all footings a minimum of 24" below finished subgrade elevation.
2. Prior to pouring concrete foundations, all loose earth, water, and debris is to be removed from foundation bed.
3. See Soils Report for special grading procedure under building and paved areas.
4. Footings are designed using a maximum allowable bearing capacity of 2,000 psf dead plus live loads. The allowable bearing capacity may be increased by one-third when transient loads such as wind or seismicity are included.
5. The bottom elevation of all footings is subject to the approval of the Geotechnical Engineer.
6. Provide for de-watering of all excavations from either surface water or seepage.
7. Protect all foundation excavations on the site from caving.
8. After foundation excavations have been completed and prior to placing reinforcing and formwork, the foundation bed is to be inspected by the Soils Engineer. All loose material is to be removed.
9. Secure in position prior to inspection and pouring concrete or grouting block, all anchor bolts, holdown anchors, reinforcing steel, dowels, inserts, etc. For anchor bolts and holdowns, use Simpson Anchormate anchor bolt holders. Stabbing bolts after pouring will not be allowed.

CONCRETE

1. All concrete for the footings, flat work, and miscellaneous items is to have a minimum ultimate compressive strength of 3,000 psi at 28 days, unless noted otherwise on the Drawings.
2. Reinforcing bars are to be of intermediate grade conforming to ASTM A 615, grade 40 for #2 and #3 bars and grade 60 for #4 bars and larger.
3. Cement is to be type II, low alkali (no higher than .4%), conforming to ASTM C 150. Up to a maximum of 18% of cement may be substituted with Fly Ash (type "F").
4. All aggregate used in concrete are to conform to ASTM C-33. Aggregate shall be uniformly graded, with the maximum aggregate size required to be 1" to 3/4".
5. Coarse and fine aggregate (sand) are to come from a source proven to have non-reactive characteristics. Use an approximate 60% to 40% ratio of coarse aggregate to fine aggregate (by weight) respectively.
6. Splices of reinforcing steel are to be lapped per detail 4/S1.1 and securely wired together. Splices of adjacent reinforcing bars shall be staggered wherever possible. See Drawings for particular requirements for splice breaks.
7. Minimum concrete cover for reinforcing is as follows:

Cast against and permanently exposed to earth	3"
Cast in forms and exposed to earth or weather	2"
Interior slabs, walls, and joists	1"
Interior beams, girders, and columns	1-1/2"

8. Location of sleeves for pipes, and for pipes intended to be cast in concrete, for which no specific details are shown shall be subject to the review of the Structural Engineer.
9. Secure in position prior to inspection and pouring concrete, all anchor bolts, holdown anchors, reinforcing steel, dowels, inserts, etc. For anchor bolts and holdowns, use Simpson Anchormate anchor bolt holders. Stabbing bolts after pouring slab will not be allowed.
11. Concrete shall contain a minimum of 5.5 sacks of cement per cubic yard, a maximum water/cement ratio of .5, and shall have a slump no greater than 4". Do not exceed 36 gails of water per cubic yard of concrete.
10. Make and test concrete cylinders in accordance with Section 1704.4 of the CBC.
11. Vibrate all concrete as it is being placed with electrically-operated vibrating equipment.

Structural Engineers
599 Higuera St., Ste. H, San Luis Obispo, CA. 93401
Tel. (805) 548-0500 Fax: (805) 548-0501

RASMUSSEN & ASSOCIATES
Architecture
Planning
Interiors
21 S. California Street
Suite 200, First Floor
Ventura, California 93001
(805) 648-1234

2018-01-16 PRELIMINARY SET
NOT FOR CONSTRUCTION

Sheet Title: STRUCTURAL GENERAL NOTES

Revisions	
R&A No:	A161305
Date:	9/25/17
Drawn:	
Checked:	JW
Consult. No:	SWA 17044

RIVIERA SHOPPING CENTER
STARBUCKS COFFEE HOUSE
4710 TELEPHONE ROAD
VENTURA, CALFORNIA 93003

Sheet No.
S0.1

Abbreviations

APPLIES TO STRUCTURAL DRAWINGS ONLY

SYMBOLS USED AS ABBREVIATIONS

@	AT
∠	ANGLE
℄	CENTERLINE
⊏	CHANNEL
d	PENNY
⊥	PERPENDICULAR
⅊	PLATE(S)
?	DIAMETER
#	SQUARE
w/	WITH
wo/	WITHOUT
#	NUMBER
&	AND
o/	OVER

ABBREVIATIONS

A.C.	ASPHALT CONCRETE
ALT.	ALTERNATE
A.B.	ANCHOR BOLT(S)
APPROX.	APPROXIMATE(LY)
ARCH.	ARCHITECT(URAL)
BSMT.	BASEMENT
BRG.	BEARING
BM.	BEAM
BLK.	BLOCK
BLKG.	BLOCKING
B.O.	BOTTOM OF
B.O.F.	BOTTOM OF FOOTING
BLDG.	BUILDING
B.N.	BOUNDRY NAILING
C.	CAMBER
C.I.P.	CAST-IN-PLACE
CEM.	CEMENT
CNTR.	CENTER(ED)
CHAM.	CHAMFER(ED)
CLR.	CLEAR(ANCE)
CLS.	CLOSURE
C.J.	COLD JOINT or CONTROL JOINT
COL.	COLUMN(S)
CONC.	CONCRETE
C.M.U.	CONCRETE MASONRY UNIT
CONT.	CONTINUE(OUS)
CONTR.	CONTRACT(OR)
CORR.	CORRUGATED
CSK.	COUNTERSINK(SUNK)
C.F.	CUBIC FOOT
C.Y.	CUBIC YARD
DBL.	DOUBLE
D.L.	DEAD LOAD
DEP.	DEPRESS(ED)
DTL.	DETAIL(S)
DIAG.	DIAGONAL
DIA.	DIAMETER
DIM.	DIMENSION(S)
DF.	DOUGLAS FIR
DN.	DOWN
E.	EAST
E.N.	EDGE NAILING
EA.	EACH
E.F.	EACH FACE
(E)	EXISTING
ELEV.	ELEVATION
EQ.	EQUAL
E.B.	EXPANSION BOLT
EXP.	EXPOSE(D)
EXT.	EXTERIOR
F.N.	FIELD NAILING
FAB.	FABRICATE(D)(ION)
F.B.	FLOOR BEAM
F.O.	FACE OF
FOC.	FACE OF CONCRETE
FOM.	FACE OF MASONRY
FOS.	FACE OF STUD
F.S.	FAR SIDE
FIN.	FINISH
FFE.	FINISH FLOOR ELEVATION
FF.	FINISH FLOOR
FLR.	FLOOR
FT.	FOOT, FEET
FTG.	FOOTING
FDN.	FOUNDATION
FUT.	FUTURE
GA.	GAGE, GAUGE
GALV.	GALVANIZE(D)
GL.	GLASS, GLAZING
G.B.	GRADE BEAM
GLB.	GLUED LAMINATED BEAM
GYP.	GYPSUM
GYPBD.	GYPBOARD
HDR.	HEADER
H.V.A.C.	HEATING/VENTILATING /AIR CONDITIONING
HT.	HEIGHT
HK.	HOOK(S)
HORIZ.	HORIZONTAL
INCL.	INCLUDE(D)(ING)
I.D.	INSIDE DIAMETER
IN.	INCHES
INS.	INSULATE(D)(ING)
INSP.	INSPECT(ING)(ION)
INT.	INTERIOR
INTM.	INTERMEDIATE
JT.	JOINT
JST.	JOIST
KO.	KNOCKOUT
K.J.	KEYED JOINT
L.	LENGTH
LB.	POUND
LAM.	LAMINATE(D)
LDGR.	LEDGER
LH.	LEFT HAND
L.L.	LIVE LOAD
M.B.	MACHINE BOLT
M.I.	MALLEABLE IRON
MFR.	MANUFACTURER
MAS.	MASONRY
M.L.	MASONRY LINTEL
MATL.	MATERIAL
MAX.	MAXIMUM
MECH.	MECHANICAL
MED.	MEDIUM
MMB.	MEMBRANE
M.F.D.	METAL FLOOR DECKING
M.R.D.	METAL ROOF DECKING
MDSP.	MIDSPAN
MISC.	MISCELLANEOUS
N.	NORTH
(N)	NEW
N.I.C.	NOT IN CONTRACT
N.T.S.	NOT TO SCALE
N.S.	NEAR SIDE
O.C.	ON CENTER
OPNG.	OPENING
O.W.J.	OPEN-WEB JOIST
OPP.	OPPOSITE
O.D.	OUTSIDE DIAMETER
PNL.	PANEL
PRLN.	PURLIN(S)
PAR.	PARALLEL
PARTN.	PARTITION
PVMT.	PAVEMENT
PERF.	PERFORATE
PLY.	PLYWOOD
P.W.J.	PLYWOOD WEB JOIST
PT.	POINT
PVC.	POLYVINYLCHLORIDE
PCF.	POUNDS PER CUBIC FOOT
PLF.	POUNDS PER LINEAL FOOT
PSI.	POUNDS PER SQUARE INCH
PREFAB.	PREFABRICATE(D)
PREFIN.	PREFINISH(ED)
P.T.D.F.	PRESSURE TREATED DOUGLAS FIR
PL.	PLATE(S)
PLN.	PROPERTY LINE
RAD.	RADIUS
RLNG.	RAILING
REF.	REFER(ENCE)
REINF.	REINFORCE(D)
REQ.	REQUIRE(D)
REV.	REVERSE(D)
REV.	REVISE(ION)
RH.	RIGHT HAND
R.D.	ROOF DRAIN
RFG.	ROOFING
RM.	ROOM
R.O.	ROUGH OPENING
S.J.	SAWED JOINT
SCHED.	SCHEDULE
SEC.	SECTION
SHT.	SHEET or SHEATHING
SIMP.	"SIMPSON" (a manufacturer)
SIM.	SIMILAR
S.	SOUTH
SPC.	SPACE(R)(D)(ING)
SPEC.	SPECIFICATION
SQ.	SQUARE
STAG.	STAGGER(ED)
STL.	STEEL
STD.	STANDARD
STRL.	STRUCTURAL
SYM.	SYMMETRICAL
THRD.	THREAD(ED)
THK.	THICK
T&G	TONGUE & GROOVE
T.O.	TOP OF
TOC.	TOP OF CONCRETE
TOCB.	TOP OF CURB
TOF.	TOP OF FOOTING
TOG.	TOP OF GRADE
TOM.	TOP OF MASONRY
TOP.	TOP OF PAVING
TOPL.	TOP OF PLATE
TOS.	TOP OF SLAB
TOSHTG.	TOP OF SHEATHING
TOSTL.	TOP OF STEEL
TOW.	TOP OF WALL
TYP.	TYPICAL
U.N.O.	UNLESS NOTED OTHERWISE
V.B.	VAPOR BARRIER
VNR.	VENEER
VERT.	VERTICAL
WF.	WIDE FLANGE
WWF.	WELDED WIRE FABRIC
WP.	WATERPROOFING
W.	WEST
W.	WIDTH or WIDE
WD.	WOOD
W.I.	WROUGHT IRON
WM.	WIRE MESH

Symbols

APPLIES TO STRUCTURAL DRAWINGS ONLY

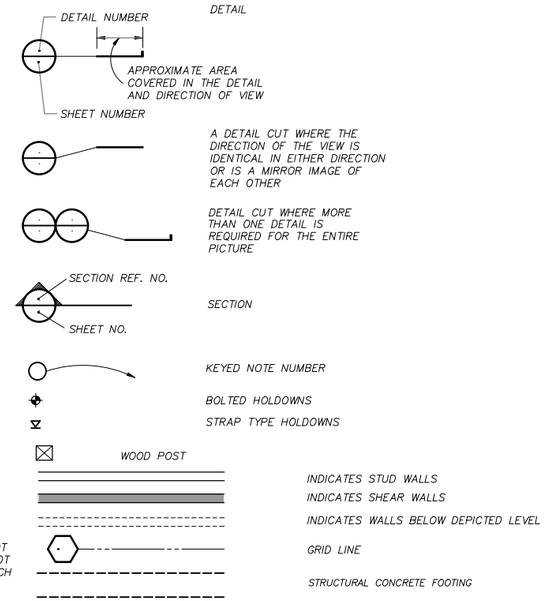

Special Inspections

APPLIES TO STRUCTURAL DRAWINGS ONLY

SPECIAL INSPECTIONS (CBC Sections 1704 & 1705)

The Owner or the Architect of record, acting as the Owner's agent, shall employ one or more special inspectors who shall provide inspections during construction on the types of work listed under Section 1705. Special Inspections are to be performed by an independent qualified third party. The Engineer of Record's structural observations do not eliminate the requirement for Special Inspection. Typically Special Inspections are performed by the Soils Engineer of Record.

THE FOLLWING ITEMS REQUIRE SPECIAL INSPECTION

1. **1705.6 Soils.** Special inspections for existing site soil conditions fill placement and load-bearing requirements shall be as required by this section and Table 1705.6. The approved geotechnical report and the construction documents prepared by the registered design professional shall be used to determine compliance. During fill placement, the special inspector shall determine that proper materials and procedures are used in accordance with the provisions of the approved geotechnical report.
2. **1705.11.2 Structural wood.** Continuous special inspection is required during field gluing operations of elements of the seismic force-resisting system. Periodic special inspection is required for nailing, bolting, anchoring and other fastening of components within the seismic force-resisting system, including wood shear walls, wood diaphragms, drag struts, braces, shear panels and hold-downs. This applies to Shear Walls designated SW2 and SW3.
   Exception: Special inspection is not required for wood shear walls, shear panels and diaphragms, including nailing, bolting, anchoring and other fastening to other components of the seismic force-resisting system, where the fastener spacing of the sheathing is more than 4 inches (102 mm) on center (o.c.).
3. Although foundation concrete specified strength is 3,000 psi at 28 days, special inspection for the concrete is not required per the code exception stated in Section 1705.3, Exception 2.3.
4. CMU
5. Epoxy & mechanical anchorage if used

TABLE 1705.6

REQUIRED VERIFICATION AND INSPECTION OF SOILS

VERIFICATION AND INSPECTION TASKS	CONTINUOUS DURING TASK LISTED	PERIODICALLY DURING TASK LISTED
1. Verify materials below shallow foundations are adequate to achieve the design bearing capacity.	—	X
2. Verify excavations are extended to proper depth and have reached proper material.	—	X
3. Perform classification and testing of compacted fill materials.	—	X
4. Verify use of proper materials, densities and lift thicknesses during placement and compaction of compacted fill.	X	—
5. Prior to placement of compacted fill, observe subgrade and verify that the site has been prepared properly.	—	X

Shear Wall Schedule

APPLIES TO STRUCTURAL DRAWINGS ONLY

Shear Wall Schedule (SW)

MARK	Sheathing Material	Edge Nailing	Concrete Anchorage	Subfloor Anchorage	Note
SW1	1/2" STRUCT. 1 PLY	10d @ 6" O.C.	5/8"ø A.B. @ 48" O.C.	NA	1-10
SW2	1/2" STRUCT. 1 PLY	10d @ 4" O.C.	5/8"ø A.B. @ 32" O.C.	NA	1-12
SW3	1/2" STRUCT. 1 PLY	10d @ 3" O.C.	5/8"ø A.B. @ 16" O.C.	NA	1-12

Shear Wall Schedule Notes :

1. All shear wall sheathing shall be A.P.A. rated plywood sheathing, Structural 1, exposure 1.
2. Field nailing shall be 10d's @ 12" o.c. unless noted otherwise.
3. All panel edges shall be solid blocked with 2x framing member, EXCEPT use 3x member for nail spacings of 4" o.c. or less.
4. All nails referred shall be Common.
5. Holdowns as shown on the plan are by "Simpson". Refer to Typical Details for end studs and anchor installation guidelines.
6. Provide 1/8" gap between plywood panel edges.
7. Provide 3/8" from center line of nails to edge of stud, plate, and blocking.
8. ✥ Indicates approximate locatoin of holdowns or straps. Refer to detail 5/S1.2 for concrete anchorage. Refer to detail 4/S1.2 for chord requirements for HDU's.
9. Framing at adjoining panel edges shall be 3" nominal and nails shall be staggered where nail spacing is 4" o.c. or less.
10. At existing walls or retrofit conditions substitute ⅝"ø x8" Simpson Titen HD for the anchor bolts shown per the schedule.
11. 3x sill plate required for full length of shear wall. At existing walls refer to referenced detail.
12. PERIODIC SPECIAL INSPECTION IS REQUIRED FOR SHEAR WALLS DESIGNATED AS SW2 & SW3.

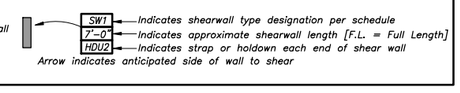

Stork, Wolfe, & Associates
SWA Structural Engineers
599 Higuera St., Ste. H, San Luis Obispo, CA. 93401
Tel. (805) 548-0800 Fax: (805) 548-0801

RASMUSSEN & ASSOCIATES
Architecture
Planning
Interiors
21 S. California Street
Fourth Floor
Ventura, California 93001
(805) 648-1234

2018-01-16 PRELIMINARY SET
NOT FOR CONSTRUCTION

Sheet Title: SPECIAL INSPECTIONS

Revisions	
R&A No:	A161305
Date:	9/29/17
Drawn:	
Checked:	JW
Consult. No:	SWA 17044

RIVIERA SHOPPING CENTER
STARBUCKS COFFEE HOUSE
4710 TELEPHONE ROAD
VENTURA, CALIFORNIA 93003

Sheet No.
S0.2

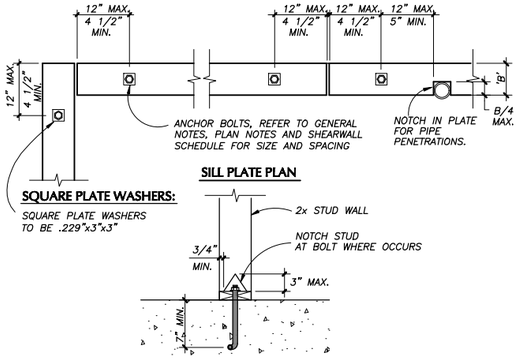

PLACING AND FRAMING AT ANCHOR BOLTS

NO SCALE

10

CONCRETE REINFORCING DEVELOPMENT & SPLICE LENGTHS (IN INCHES) - PER ACI 318-14																				
BAR LOCATION	CONCRETE		BAR SIZE																	
	TYPE	STRENGTH	#3			#4			#5			#6			#7			#8		
			l_d	l_s	l_{dh}	l_d	l_s	l_{dh}	l_d	l_s	l_{dh}	l_d	l_s	l_{dh}	l_d	l_s	l_{dh}	l_d	l_s	l_{dh}
FOUNDATION REINF., SLAB-ON-GRADE REINF.	NORMAL	f'c = 3ksi	17	22	9	22	29	11	28	36	14	33	43	17	45	62	20	55	72	22

NOTES:

1. l_d = DEVELOPMENT LENGTH
2. WHEN SPLICING BARS OF DIFFERENT SIZE, USE LAP SPLICE LENGTH OF LARGER BAR, U.N.O.
3. STAGGER EA. SPLICES AS

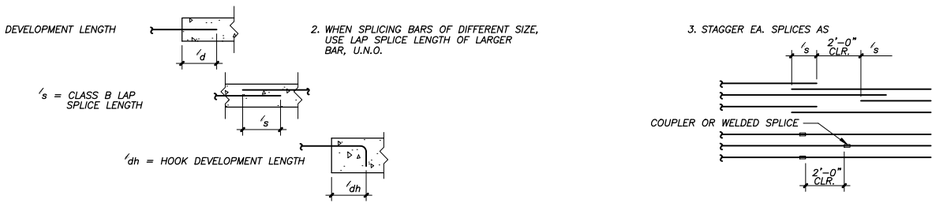

REINFORCING DEVELOPMENT & SPLICE LENGTHS

NO SCALE

4

The details on this sheet are "typical" details which are to be used by the contractor where these various general conditions exist. These details are not necessarily referenced anywhere else in this set of construction documents. Prior to starting work, the contractor is to confirm with the Engineer that these details are properly interpreted and applied to the appropriate conditions.

1

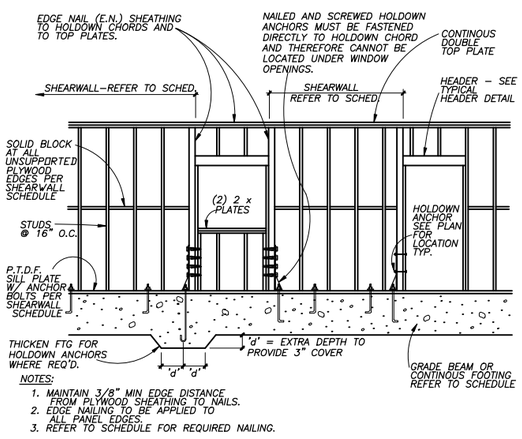

STUD & SHEAR WALL

NO SCALE

11

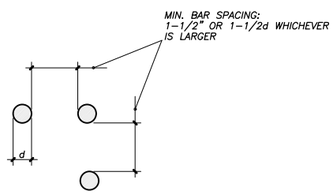

A BAR SPACING FOR NON-SPLICED BARS

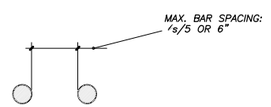

B BAR SPACING FOR BARS SPLICED WITH A NON-CONTACT LAP

BAR SPACING IN CONCRETE

NO SCALE

8

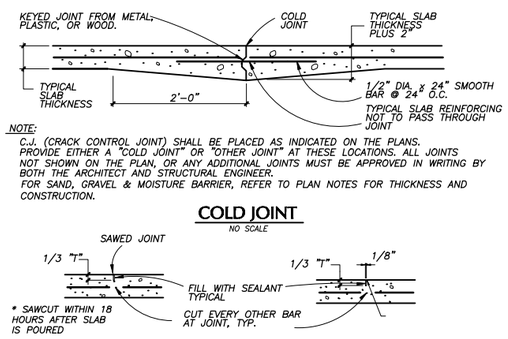

CRACK CONTROL JOINTS

5

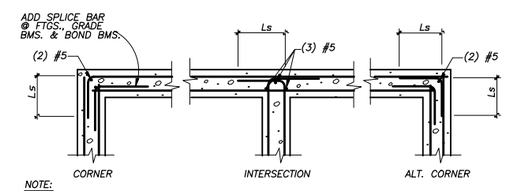

MINIMUM REINFORCING AT CORNERS & INTERSECTIONS

NO SCALE

REFER TO DETAIL 4/S1.1 FOR 'Ls' DIMENSION

2

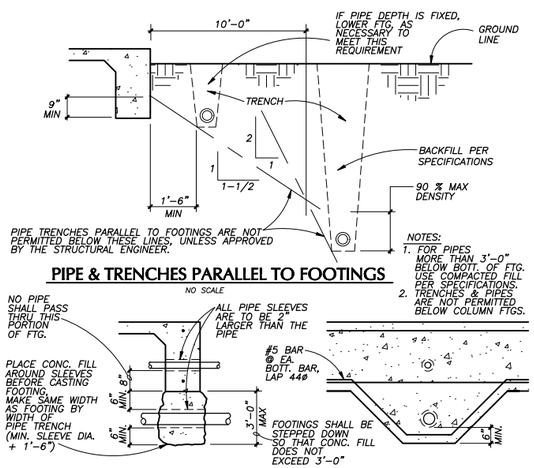

PIPE & TRENCHES TRANSVERSE TO FOOTINGS

NO SCALE

12

REFER TO PROJECT GEOTECHNICAL ENGINEERING INVESTIGATION REPORT FOR ADDITIONAL INFORMATION

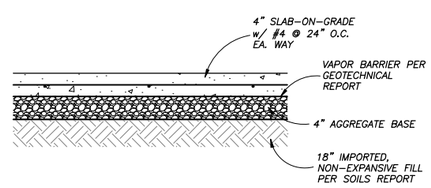

INTERIOR SLAB-ON-GRADE

9

WHERE CONCRETE SLABS ON GRADE MEET LANDSCAPE AREAS, CUTOFFS SUCH AS INVERTED CURBS ARE RECOMMENDED. THE EDGES OF THE SLABS ON GRADE SHOULD BE EXTENDED TO THE BOTTOM OF THE 18" NON-EXPANSIVE SECTION

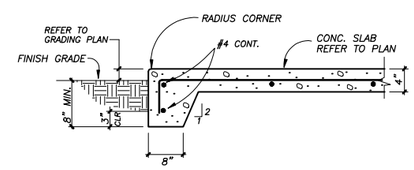

EDGE OF EXTERIOR SLAB

NO SCALE

6

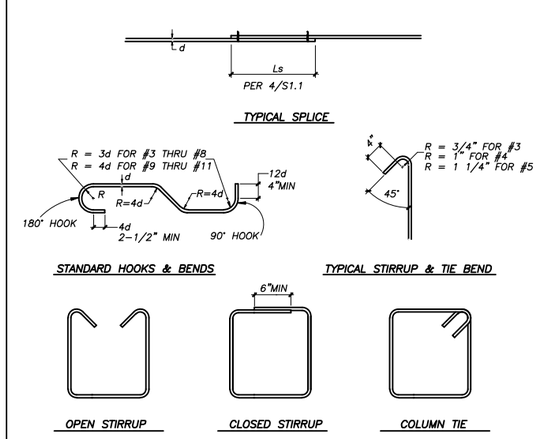

REINFORCING DETAILS

Scale: N.T.S.

3

Structural Engineers
599 Higuera St., Ste. H, San Luis Obispo, CA. 93401
Tel. (805) 548-0500 Fax: (805) 548-0501
Stork, Wolfe, & Associates

RASMUSSEN & ASSOCIATES
Architecture
Planning
Interiors
21 S. California Street
Suite 100, Second Floor
Ventura, California 93001
(805) 648-1234

2018-01-16 PRELIMINARY SET
NOT FOR CONSTRUCTION

Sheet Title: TYPICAL DETAILS

Revisions	
R&A No:	A161305
Date:	9/25/17
Drawn:	JW
Checked:	
Consult. No:	SWA 17044

RIVIERA SHOPPING CENTER
STARBUCKS COFFEE HOUSE
4710 TELEPHONE ROAD
VENTURA, CALIFORNIA 93003

Sheet No.
S1.1

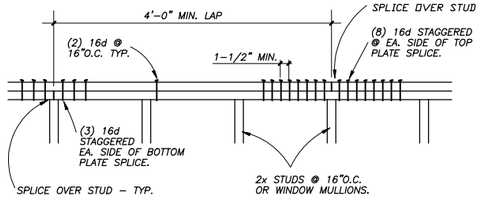

TYPICAL NAILED SPLICE (APPLIES WHEN NO OTHER SPLICE INDICATED)

PLATE SPLICE

10

HEADER SCHEDULE

SPAN	HEADER d (NOMINAL)
TO - 3'-11"	WIDTH OF STUD x 4
4'-0" - 5'-11"	WIDTH OF STUD x 6
6'-0" - 7'-11"	WIDTH OF STUD x 8
8'-0" - 10'-0"	WIDTH OF STUD x 10

FOR SPANS GREATER THAN 10'-0" HEADER SHALL BE AS DIRECTED BY STRUCTURAL ENGINEER.

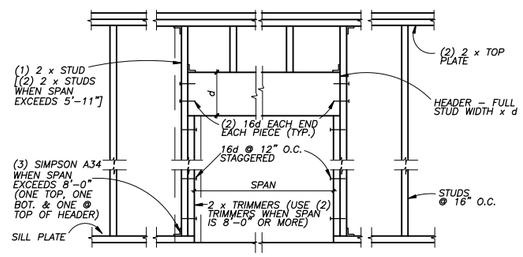

MINIMUM HEADERS FOR EXTERIOR & BEARING WALLS

NO SCALE

7

HOLDOWN	SIMP. SDS 1/4"x2 1/2" SCREWS	MIN. HDN. CHORD
HDU2	6	(2)-2x STUDS
HDU4	10	(2)-2x STUDS
HDU5	14	(2)-2x STUDS
HDU8	20	(3)-2x STUDS
HHDQ11	24	6x POST

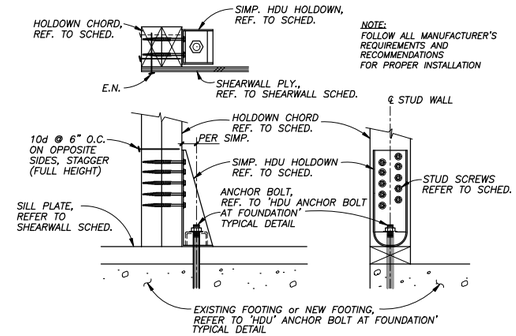

HDU HOLDOWNS

4

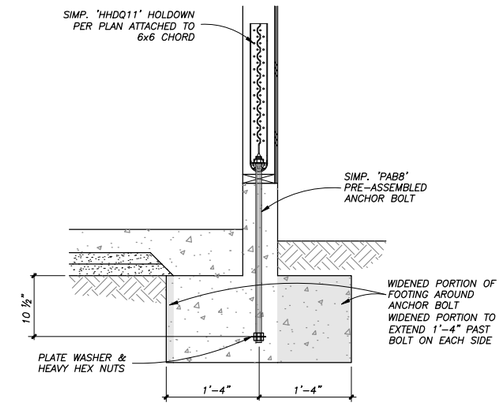

ANCHORAGE AT HHDQ11 HOLDOWNS

1

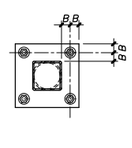

TYPE BP-1

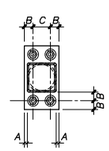

TYPE BP-2

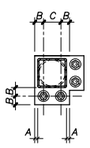

TYPE BP-3

UNLESS NOTED OTHERWISE :
- PLATE THICKNESS = 3/4"
- ANCHOR BOLTS w/ DBL. NUTS = 3/4"ø w/9" MIN. EMBEDMENT
- WELD COL. TO PL. w/1/4" FILLET ALL AROUND

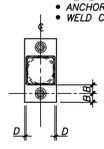

TYPE BP-4

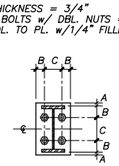

TYPE BP-5

A =	1/2" MIN.
B =	1-1/2" MIN.
C =	3" MIN.
D =	1/4" MIN.

N O T E :
TUBE STEEL COL. SHOWN. DETAILS ARE SIMILAR FOR PIPE COL.

STEEL BASE PLATE - PLAN VIEW

Scale: N.T.S.

11

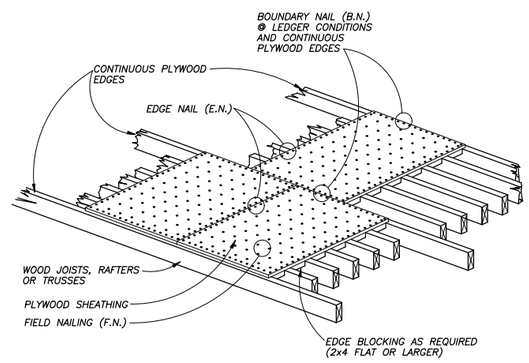

NOTE:
PROVIDE ONE PLYCLIP BETWEEN EACH JOIST, RAFTER OR TRUSS @ ALL UNBLOCKED EDGES, UNLESS USING T&G PLYWOOD SHEATHING

PLYWOOD NAILING

NO SCALE

8

HOLD DOWN	HD BOLT	MIN. STEM	EMBED. REQ'D
HDU2	SSTB20	NA	16 5/8"
HDU4	SSTB24	NA	20 5/8"
HDU5	SSTB24	NA	24 7/8"
HDU8	SSTB34	NA	28 7/8"

FOR HHDQ11 HOLDOWNS REFER TO DETAIL 1/S1.2

WHERE SUB-FLOOR OR CURB OCCURS PROVIDE SIMP. 'CN' COUPLER NUT AS NEEDED TO SATISFY CONDITIONS SHOWN

NOTE: FOLLOW ALL MANUFACTURER'S REQUIREMENTS AND RECOMMENDATIONS FOR PROPER INSTALLATION

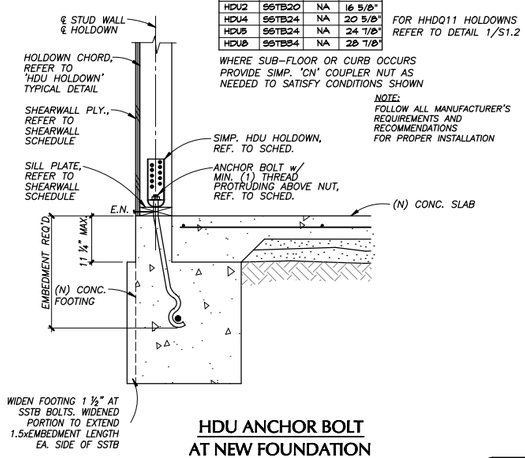

HDU ANCHOR BOLT AT NEW FOUNDATION

5

NAILING SCHEDULE (1)

CONNECTION	NAILING (2)
JOIST TO SILL OR GIRDER, TOE NAIL	(3) - 8d
BLOCKING TO JOIST, EACH END	(2) - 16d
SOLE PLATE TO JOIST OR BLOCKING, FACE NAIL	16d AT 16" O.C.
TOP PLATE TO STUD, END NAIL	(2) - 16d
STUD TO SOLE PLATE, TOE NAIL	(4) - 8d
DOUBLE STUDS, FACE NAIL	16d AT 24" O.C.
DOUBLE TOP PLATES, FACE NAIL	16d AT 16" O.C.
TOP PLATES, LAPS & INTERSECTIONS, FACE NAIL	(4) - 16d (OR AS SPECIFIED)
CONTINUOUS HEADER, TWO PIECES	16d @ 16" (ALONG EA. EDGE)
CEILING JOISTS TO PLATE, TOE NAIL	(3) - 8d
CONT. HEADER TO STUD, TOE NAIL	(4) - 8d
CEILING JOISTS, LAPS OVER PARTITIONS, FACE NAIL	(3) -16d
CEILING JOISTS TO PARALLEL RAFTERS, FACE NAIL	(3) - 16d
RAFTER TO PLATE, TOE NAIL	(3) - 8d
1" BRACE TO EA. STUD & PLATE, FACE NAIL	(2) - 8d (OR AS SPECIFIED)
BUILT-UP CORNER STUDS	16d AT 24" O.C.
BUILT-UP GIRDERS & BEAMS	20d @ 32" O.C. (TOP & BOTT. AND STAGGERED) (2) - 20d @ ENDS
PLYWOOD FLOOR & ROOF SHEATHING	10d (SEE NOTE 4, U.N.O.)

NOTES:
1) MINIMUM NAILING ONLY. SEE DETAILS FOR LOCATIONS WHERE OTHER NAILING IS SPECIFIED.
2) COMMON NAILS CONFORMING TO ASTM F1667 TO BE USED THROUGHOUT U.N.O.
3) NAILS SPACED AT 6"O.C. AT EDGES, 12"O.C. AT INTERMEDIATE SUPPORTS (10"O.C. AT INTERMEDIATE SUPPORTS FOR FLOORS).

NAILING SCHEDULE

2

NAIL DIMENSIONS		
NAIL	DIAMETER	LENGTH
20d	0.192"	4"
16d	0.162"	3-1/2"
10d	0.148"	3"
8d	0.131"	2-1/2"

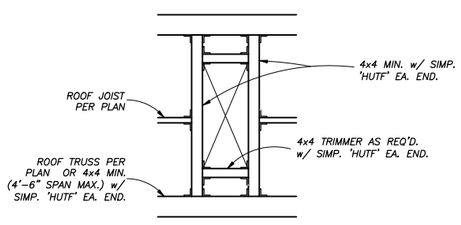

NOTE:
1. LOCATE ALL OPENINGS TO AVOID ROOF TRUSSES
2. SEE ARCHITECTURAL AND MECHANICAL DRAWINGS FOR LOCATION AND SIZE OF OPENINGS.

TYPICAL WOOD FRAMING AT ROOF OPENING

Scale: N.T.S.

12

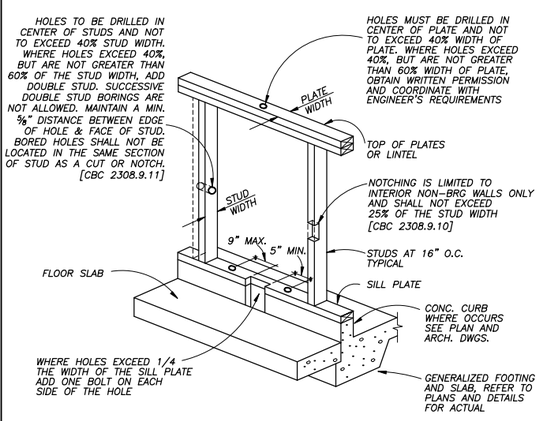

HOLES AND NOTCHES IN STUD WALL FRAMING

Scale: N.T.S.

9

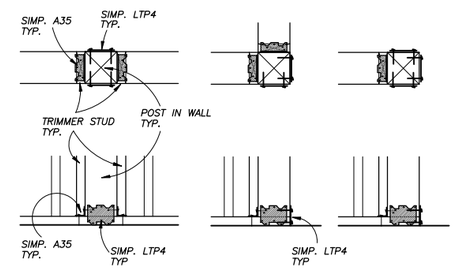

NOTE: IN 2x4 STUD WALLS USE A34 IN A35

POST IN WALL TO SILL PLATE U.N.O.

6

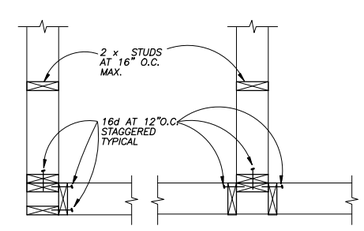

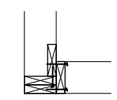

ALTERNATE CORNER

NOTE:
1. PROVIDE THE REQUIRED POST WHERE HOLDOWN ANCHOR OCCURS.

PLAN VIEW

STUD WALL AT INTERSECTIONS AND CORNERS

NO SCALE

3

Stork, Wolfe, & Associates
SWA Structural Engineers
599 Higuera St., Ste. H, San Luis Obispo, CA. 93401
Tel. (805) 548-0500 Fax: (805) 548-0501

RASMUSSEN & ASSOCIATES
Architecture
Planning
Interiors
21 S. California Street
Suite 100
Ventura, California 93001
(805) 648-1234

2018-01-16 PRELIMINARY SET
NOT FOR CONSTRUCTION

Sheet Title: TYPICAL DETAILS

Revisions	
R&A No:	A161305
Date:	9/25/17
Drawn:	
Checked:	JW
Consult. No:	SWA 17044

RIVIERA SHOPPING CENTER
STARBUCKS COFFEE HOUSE
4710 TELEPHONE ROAD
VENTURA, CALIFORNIA 93003

Sheet No.
S1.2

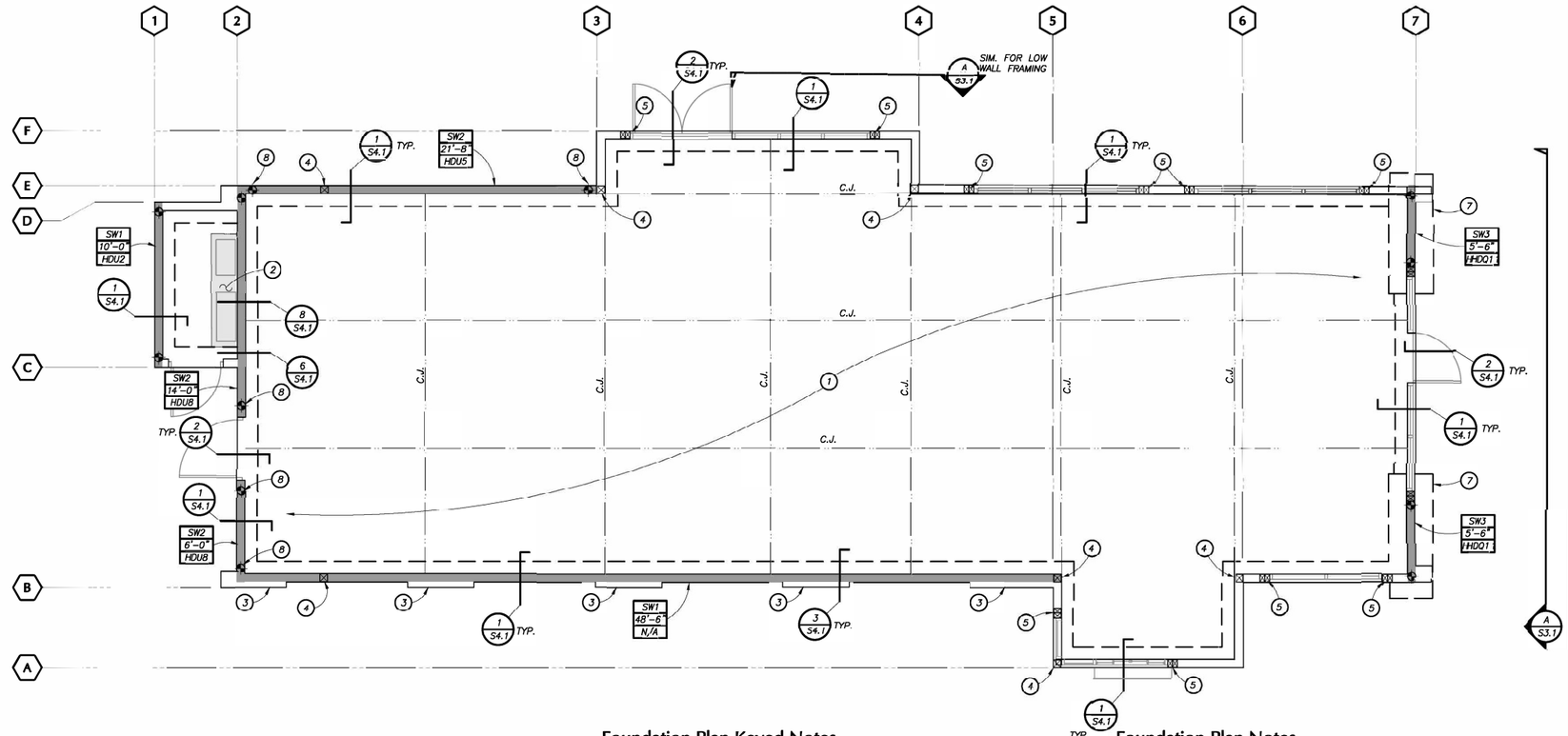

REFER TO SHEET S0.2 FOR SHEAR WALL SCHEDULE

FOUNDATION PLAN

Scale: 1/4" = 1'-0"

Foundation Plan Keyed Notes

1. INTERIOR CONC. SLAB-ON-GRADE PER PLAN NOTES
2. HOUSEKEEPING PAD PER DETAIL 8/S4.1. COORDINATE FINAL LOCATION WITH ELECTRICAL.
3. 2x4 WALL ON OUTSIDE OF 2x6 WALL WHERE SHOWN
4. 6x6 POST
5. 4x6 TRIMMER w/ 4x6 KING AS SHOWN ~ SISTER TOGETHER w/ SDS SCREWS @ 18" O.C.
6. NOT USED
7. WIDEN AND LENGTHEN FOOTING AT 'HHDQ11' HOLDOWNS PER DETAIL 1/S1.2
8. WIDEN FOOTING 1 ½" AT SSTB LOCATIONS ~ REFER TO DETAIL 5/S1.2 FOR ADDITIONAL INFORMATION

Legend

- 2x STUD WALL PER FOUNDATION PLAN NOTE
- 2x SHEAR WALL. REF. TO SHEAR WALL SCHED. ON SHEET S0.2

Foundation Plan Notes

A. REFER TO GENERAL NOTES SHEET S0.1.
B. "C.J." INDICATES CONCRETE SLAB CRACK CONTROL JOINT. REFER TO DETAIL 5/S1.1 FOR ADDITIONAL REQUIREMENTS.
C. SEE ARCHITECTURAL PLANS FOR LOCATIONS OF ALL WALL OPENINGS, SLOPED AND DEPRESSED SLABS, CONCRETE CURBS, ADDITIONAL EMBEDDED ITEMS NOT SHOWN ON THESE DRAWINGS. VERIFY ALL BUILDING DIMENSIONS, SLOPES AND DEPRESSED SLAB DIMENSIONS WITH ARCHITECTURAL PLANS BEFORE BEGINNING WORK. REPORT ANY DISCREPANCIES TO THE ARCHITECT FOR RESOLUTION.
D. SEE PROJECT GEOTECHNICAL REPORT FOR SPECIAL GRADING REQUIREMENTS UNDER FOOTINGS AND SLABS.
E. COLUMNS ARE ONE SIZE FROM FOUNDATION TOP OF PARAPET UNLESS OTHERWISE NOTED ON PLANS.
F. ALL EXTERIOR WALL STUDS SHALL BE 2x6 D.F. #2 @ 16" O.C. UNLESS NOTED OTHERWISE ON PLANS AND DETAILS.
G. PRIOR TO THE CONTRACTOR REQUESTING A BUILDING DEPARTMENT FOUNDATION INSPECTION, THE GEOTECHNICAL ENGINEER SHALL ADVISE THE BUILDING OFFICIAL IN WRITING THAT:
   a. THE BUILDING PAD WAS PREPARED IN ACCORDANCE WITH THE GEOTECHNICAL REPORT;
   b. THE UTILITY TRENCHES HAVE BEEN PROPERLY BACKFILLED AND COMPACTED; AND
   c. THE FOUNDATION EXCAVATIONS, FORMING AND REINFORCEMENT COMPLY WITH THE GEOTECHNICAL REPORT AND APPROVED PLAN.
H. INDICATES APPROX. HOLDOWN LOCATION PER SHEAR WALL SCHEDULE. REFER TO TYPICAL DETAILS FOR INFORMATION ON EXACT LOCATION OF HOLDOWNS WITH RESPECT TO THE WALL CORNERS & JAMBS.
I. FLOORS ARE 4" THICK CONCRETE SLABS-ON-GRADE UNLESS NOTED OTHERWISE ON THE DRAWINGS, AND SHALL BE REINFORCED WITH #4 BARS @ 24" O.C. EACH WAY 1-3/4" FROM THE TOP OF THE SLAB SUPPORTED ON MASONRY BLOCKS SPACED A MAXIMUM OF 4'-0" ON CENTER. THE SLAB SHALL BE UNDERLAIN WITH A CLASS 'A' MEMBRANE OVER 4" AGGREGATE BASE ~ REFER TO DETAIL 9/S1.1 AND PROJECT GEOTECHNICAL REPORT.
J. THE ENTIRE EXTERIOR OF THE STRUCTURE SHALL BE SHEATHED WITH 1/2" STRUCTURAL I EXTERIOR GRADE PLYWOOD. EXCEPT AT SHEAR WALLS, OR UNLESS NOTED OTHERWISE ON THE DRAWINGS:
   E.N. (EDGE NAILING) - 10d @ 6" O.C.
   F.N. (FIELD NAILING) - 10d @ 12" O.C.
K. REFER TO CIVIL DRAWINGS FOR SIDEWALKS.
L. 6" MIN. WIDE CURB SHALL BE PROVIDED AT ALL EXTERIOR STUD WALLS, TYP. REF. TO DET. 1/S4.1.

Structural Engineers
599 Higuera St., Ste. H, San Luis Obispo, CA 93401
Tel: (805) 548-9600 Fax: (805) 548-9601

RASMUSSEN & ASSOCIATES
Architecture
Planning
Interiors
21 S. California Street
Fourth Floor
Ventura, California 93001
(805) 648-1234

2018-01-16 PRELIMINARY SET
NOT FOR CONSTRUCTION

Sheet Title: FOUNDATION PLAN

Revisions	
R&A No.	A161305
Date:	9/29/17
Drawn:	AH
Checked:	SW
Consult. No.	SWA 17044

RIVIERA SHOPPING CENTER
STARBUCKS COFFEE HOUSE
4710 TELEPHONE ROAD
VENTURA, CALIFORNIA 93003

Sheet No.
S2.1

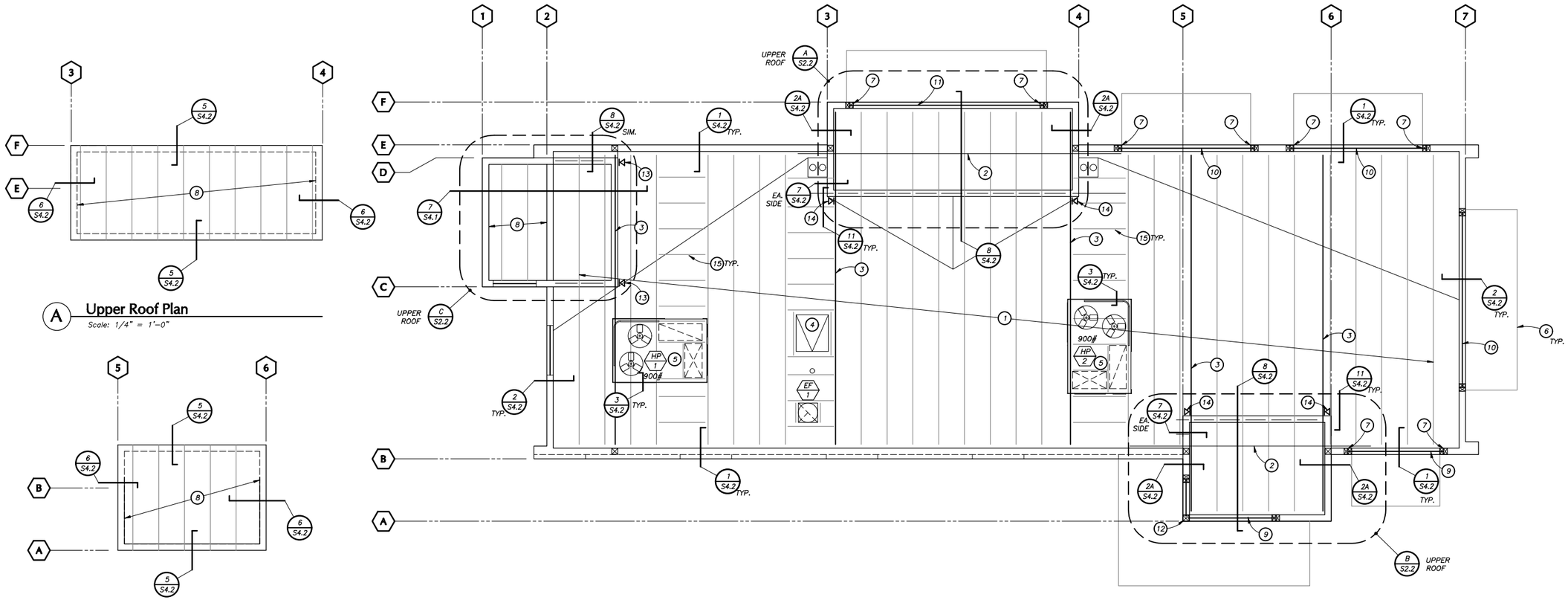

A Upper Roof Plan
Scale: 1/4" = 1'-0"

B Upper Roof Plan
Scale: 1/4" = 1'-0"

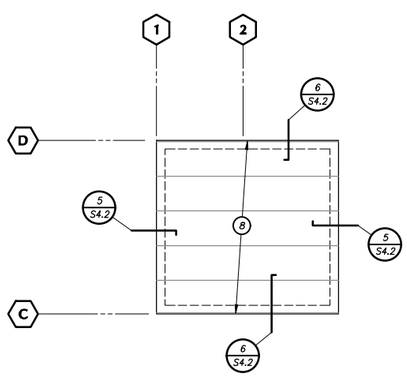

C Upper Roof Plan
Scale: 1/4" = 1'-0"

ROOF FRAMING PLAN

Scale: 1/4" = 1'-0"

Roof Framing Plan Keyed Notes

1. ROOF TRUSSES AT 24" O.C., U.N.O. ON ROOF FRAMING PLAN.
2. SIMPSON 'CMST14' COIL STRAP O/ RF. PLYWOOD & 4x BLK'G. EXTEND STRAP 2'-6" MIN. O/TOP OF LEDGER EA. END. [USE NAILS AT 3 ½" O.C. OVER BLOCKING PORTIONS]
3. DBL. 1¾" x 14" LVL RAFTER w/ RF. PLYWOOD E.N.
4. APPROXIMATE LOCATION OF ROOF HATCH ~ CONTRACTOR TO COORDINATE WITH ARCHITECTURAL
5. REFER TO DETAIL 3/S4.2 FOR MECHANICAL ANCHORAGE. TRUSS COMPANY TO COORDINATE WITH MECHANICAL PLANS TO LOCATE OPENINGS IN BETWEEN ROOF TRUSSES. REF. TO TYP. DET. 12/S1.2 FOR FRAMING AT OPENING, TYP.
6. AWNING BELOW ~ REFER TO ARCH'L. AND DETAIL 10/S4.2
7. SIMP. 'ECCQ' CAP HEADER TO 4x6 TRIMMER
8. 2x8 JOISTS @ 24" O.C.
9. 6x10 HDR.
10. 6x12 HDR.
11. 5¼"x14" PSL HDR.
12. FULL HEIGHT POST ~ HANG HEADERS TO SIDE WITH SIMP. 'HUC' HANGER. STRAP AROUND CORNER WITH SIMP. 'MST37'.
13. STRAP DOUBLE END STUD AT TOWER CORNER TO BEAM BELOW w/ SIMP. 'MST27'
14. STRAP DOUBLE END STUD AT TOWER CORNER TO BEAM BELOW w/ SIMP. 'TS22' TWIST STRAP. REF. TO DET. 11/S4.2
15. 2x4 MIN. @ 24" o.c. w/ SIMP. 'Z4' EA. END, U.N.O. SEE 3/S4.2 FOR FRAMING AT MECH. UNITS, TYP.

Roof Framing Plan Notes

A. REFER TO GENERAL NOTES SHEET S0.1.

B. ROOF SHEATHING SHALL BE 5/8" PLYWOOD WITH A PANEL IDENTIFICATION INDEX OF 32/16. PLACE FACE GRAIN PERPENDICULAR TO SUPPORTS. **PROVIDE 2x4 FLAT BLOCKING AT ALL UNSUPPORTED PANEL EDGES**. UNLESS OTHERWISE NOTED ON THE DRAWINGS:
   EDGE NAILING (E.N.) = 10d @ 6" O.C.
   FIELD NAILING (F.N.) = 10d @ 12" O.C.

C. SEE ARCHITECTURAL DRAWINGS FOR LOCATIONS OF SKYLIGHTS AND ROOF HATCHES.

D. SEE MECHANICAL DRAWINGS FOR LOCATIONS OF EQUIPMENT AND ROOF OPENINGS FOR DUCTS.

E. UNLESS SPECIFICALLY NOTED ON THE PLANS, FRAMING SHALL NOT BE CUT OR RELOCATED WITHOUT PRIOR APPROVAL OF THE STRUCTURAL ENGINEER.

F. LOADS: ROOF - DL= 15 psf
   - LL = 20 psf

G. DO NOT OVER CUT AT NOTCHES IN FRAMING.

H. FINAL LOCATION AND WEIGHTS OF MECHANICAL UNITS SHALL BE APPROVED BY THE STRUCTURAL ENGINEER PRIOR TO THE PREPARATION OF ROOF FRAMING SHOP DRAWINGS.

I. WHERE ROOF PITCH CREATES LOW SPOTS THAT WILL NOT PROPERLY DRAIN, PROVIDE CRICKETS TO ENSURE ADEQUATE ROOF DRAINAGE.

J. REFER TO ARCHITECTURAL DRAWINGS FOR TOP OF PLYWOOD ELEVATIONS, LOCATIONS OF RECESSED DRAIN PANS, HATCHES AND OTHER MISCELLANEOUS ITEMS. COORDINATE WITH FRAMING.

PROVIDE LATERAL BRACING OF TRUSSES PER TRUSS MFR'R. RECOMMENDATIONS

TRUSS MANUFACTURER TO INCLUDE IN CALCULATIONS PROVISIONS FOR PONDING PER CBC 1611.

HP 1-2 900 lb
REF. TO MECH'L. & DTL. 3/S4.2

TRUSSES ARE BY _____ AND ARE A DEFERRED APPROVAL ITEM. SUBMIT CALCULATIONS AND LAYOUT PLAN TO ENGINEER FOR REVIEW PRIOR TO ORDERING AND INSTALLING TRUSSES.

DETAILS ON PLANS SHOWING ROOF TRUSS TYPE MIGHT REQUIRE MODIFICATION BASED ON ACTUAL TRUSS TYPE PROVIDED AND COORDINATION WITH MFR'R. REQUIREMENTS.

WHERE TRUSSES ARE SPACED MORE THAN 24" APART PROVIDE 2x6 LADDER FRAMING AT 24" O.C. WITH SIMP. 'LB26' HANGER EA. END TO TRUSS.

Stork, Wolfe, & Associates
SWA Structural Engineers
599 Hilgard St., Ste. H, San Luis Obispo, CA. 93401
Tel. (805) 548-0600 Fax: (805) 548-0601

RASMUSSEN & ASSOCIATES
Architecture
Planning
Interiors
21 S. California Street
Fourth Floor
Ventura, California 93001
(805) 648-1234

2018-01-16 PRELIMINARY SET
NOT FOR CONSTRUCTION

Sheet Title: ROOF FRAMING PLAN

Revisions	
R&A No:	A161305
Date:	9/25/17
Drawn:	
Checked:	JW
Consult. No:	SWA 17044

RIVIERA SHOPPING CENTER
STARBUCKS COFFEE HOUSE
4710 TELEPHONE ROAD
VENTURA, CALIFORNIA 93003

Sheet No.
S2.2

FILE PATH & NAME: P:\PROJECTS\1-SWA PROJECTS\17044 – STARBUCKS RIVIERA\STRUCT\17044_PLAN_STARBUCKS.DWG PLOTTED: 12:39 PM

THIS SHEET WAS ORIGINALLY PRINTED ON A 24"x36" SHEET.

PROVIDE LATERAL BRACING OF TRUSSES PER TRUSS MFR'R. RECOMMENDATIONS

TRUSS MANUFACTURER TO INCLUDE IN CALCULATIONS PROVISIONS FOR PONDING PER CBC 1611.

HP 1–2 900 lb
REF. TO MECH'L. & DTL. 3/S4.2

TRUSSES ARE BY _____ AND ARE A DEFERRED APPROVAL ITEM. SUBMIT CALCULATIONS AND LAYOUT PLAN TO ENGINEER FOR REVIEW PRIOR TO ORDERING AND INSTALLING TRUSSES.

DETAILS ON PLANS SHOWING ROOF TRUSS TYPE MIGHT REQUIRE MODIFICATION BASED ON ACTUAL TRUSS TYPE PROVIDED AND COORDINATION WITH MFR'R. REQUIREMENTS.

WHERE TRUSSES ARE SPACED MORE THAN 24" APART PROVIDE 2x6 LADDER FRAMING AT 24" O.C. WITH SIMP. 'LB26' HANGER EA. END TO TRUSS.

ROOF TRUSSES

1. Complete calculations showing internal layout, member forces and stress control points shall be submitted to the Building Department for approval and to the Structural Engineer for review. All calculations shall be signed by a professional Civil or Structural Engineer registered in the State of California.
2. Fabricator shall furnish name, address, and phone number of the agency inspecting fabrication operation to the city building official and the Architect.
3. Flanges shall be designed to accommodate closely spaced plywood nailing where shown on Plans.
4. Joists shall be designed for the dead and live loads shown on the framing Plans. Live loads may be reduced for load duration and or tributary area. Live load deflections shall be limited to L/240 for roofs. Dead plus live load deflections shall be limited to L/360 for roofs.

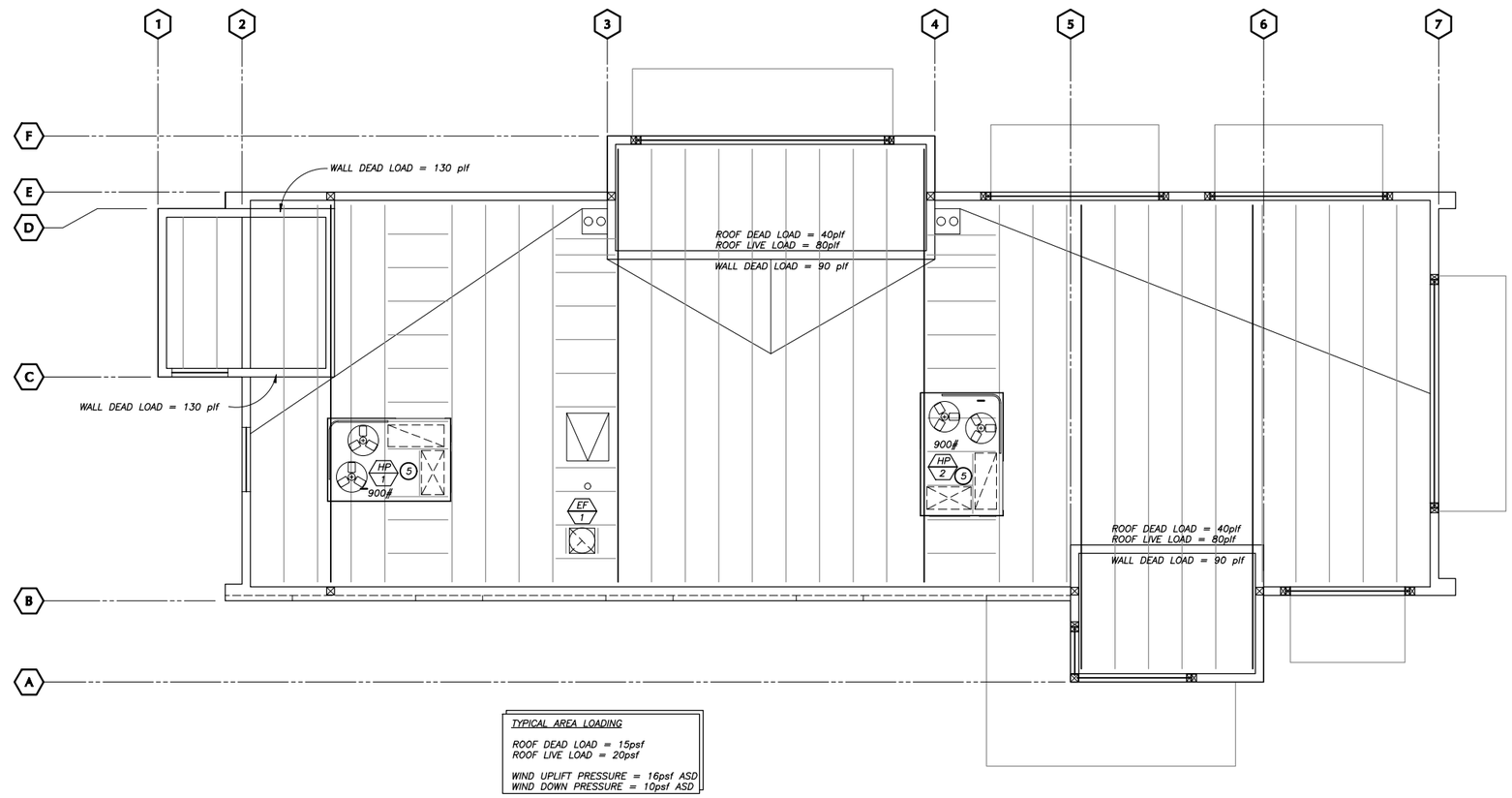

TYPICAL AREA LOADING

ROOF DEAD LOAD = 15psf
ROOF LIVE LOAD = 20psf

WIND UPLIFT PRESSURE = 16psf ASD
WIND DOWN PRESSURE = 10psf ASD

ROOF LOADING PLAN

Scale: 1/4" = 1'–0"

Stork, Wolfe, & Associates
SWA Structural Engineers
599 Higuera St., Ste. H, San Luis Obispo, CA. 93401
Tel. (805) 548-0800 Fax: (805) 548-0801

RASMUSSEN & ASSOCIATES
Architecture
Planning
Interiors
21 S. California Street
Fourth Floor
Ventura, California 93001
(805) 648-1234

Sheet Title: ROOF LOADING PLAN

Revisions	
R&A No:	A161305
Date:	9/25/17
Drawn:	
Checked:	JW
Consult. No:	SWA 17044

RIVIERA SHOPPING CENTER
STARBUCKS COFFEE HOUSE
4710 TELEPHONE ROAD
VENTURA, CALIFORNIA 93003

Sheet No.
S2.3

FILE PATH & NAME: P:\PROJECTS\1-SWA PROJECTS\17044 - STARBUCKS RIVIERA\STRUCT\17044_S3_DETAILS.DWG PLOTTED: 7:01 PM

THIS SHEET WAS ORIGINALLY PRINTED ON A 24"x36" SHEET.

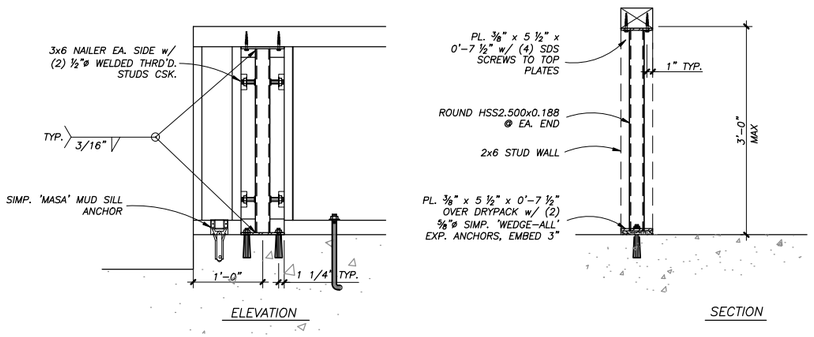

TYPICAL ROUND HSS COLUMN @ LOW WALLS

Scale: 1" = 1'-0"

KEYED NOTES

1. SHEAR ENTIRE WALL FROM MIDDLE OF HEADER TO ROOF LEDGER PER MARK 'SW1' ON SHEAR WALL SCHEDULE
2. SHEAR WALLS FROM MIDDLE OF HEADER DOWN PER MARK 'SW3' ON SHEAR WALL SCHEDULE
3. CONT. SIMP. 'CMSTC16' COIL STRAP OVER PLYWD. SHT'G. STRAP TO EXTEND 20" OVER WINDOW HEADER.
4. APPROXIMATE HEIGHT OF ROOF LEDGER
5. TRIPLE STUD AND HOLDOWN PER PLAN
6. 3xSILL AND ANCHOR BOLTS PER SHEAR WALL SCHEDULE
7. 6x12 HEADER
8. PROVIDE SHEAR WALL E.N. AT EACH END OF EACH SHEAR WALL
9. SIMP. 'HGA10-KT' WINDOW SILL TO STUDS
10. STEEL COL. FOR LOW WALL STIFFNESS ~ REFER TO DETAIL THIS SHEET

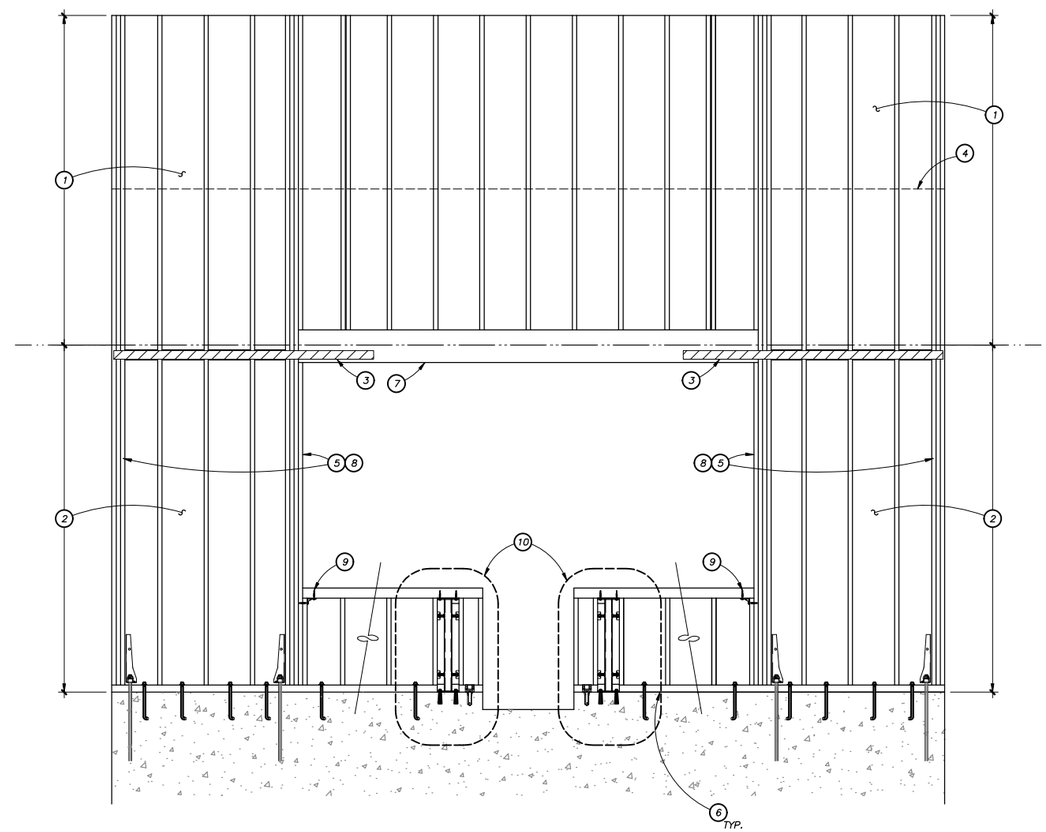

ELEVATION 'A'

Scale : 1/2"=1'-0"

Stork, Wolfe, & Associates
SWA Structural Engineers
599 Higuera St., Ste. H, San Luis Obispo, CA. 93401
Tel. (805) 548-0800 Fax: (805) 548-0801

RASMUSSEN & ASSOCIATES
Architecture
Planning
Interiors
21 S. California Street
Fourth Floor
Ventura, California 93001
(805) 648-1234

2018-01-16 PRELIMINARY SET
NOT FOR CONSTRUCTION

Sheet Title: STRUCTURAL ELEVATION

Revisions	
R&A No:	A161305
Date:	9/25/17
Drawn:	
Checked:	JW
Consult. No:	SWA 17044

RIVIERA SHOPPING CENTER
STARBUCKS COFFEE HOUSE

4710 TELEPHONE ROAD
VENTURA, CALIFORNIA 93003

Sheet No.
S3.1

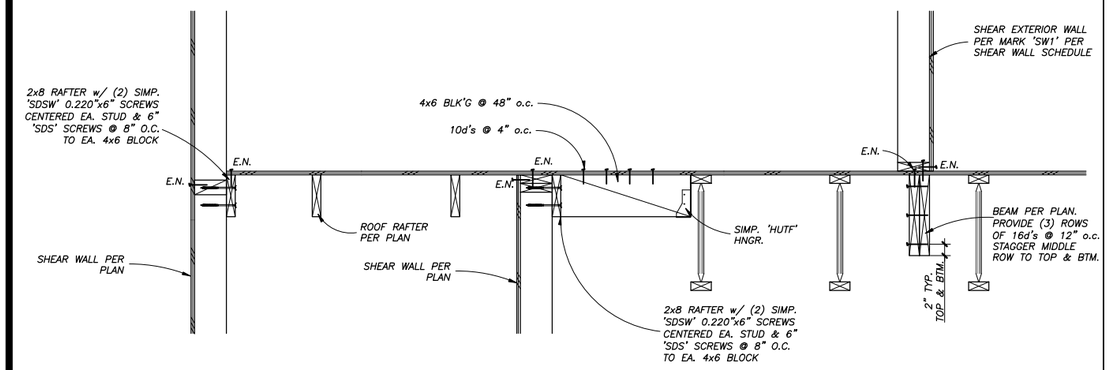

7

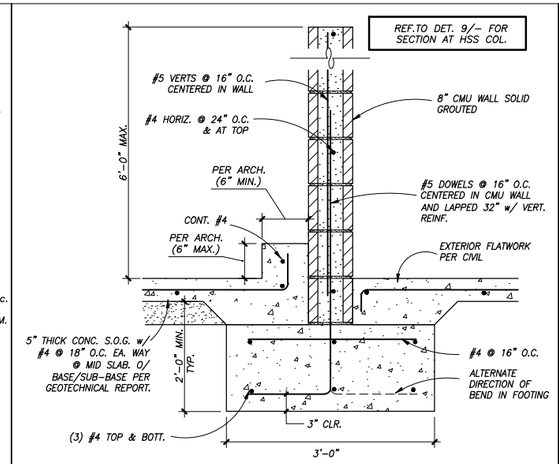

TRASH ENCLOSURE WALL

NO SCALE

4

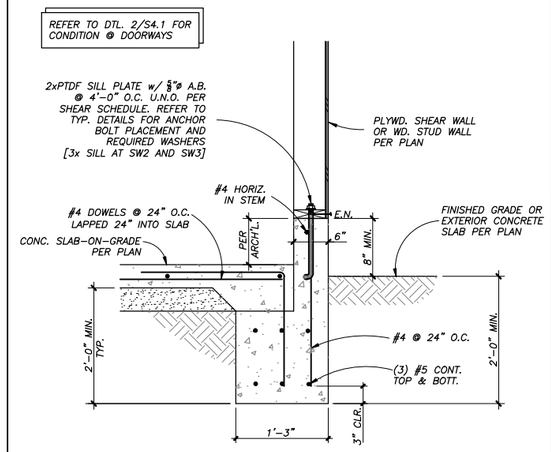

1

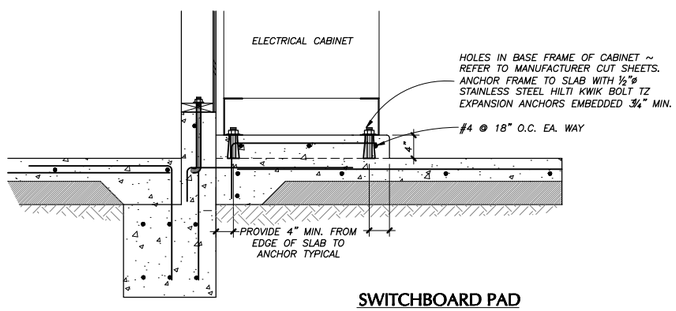

SWITCHBOARD PAD

8

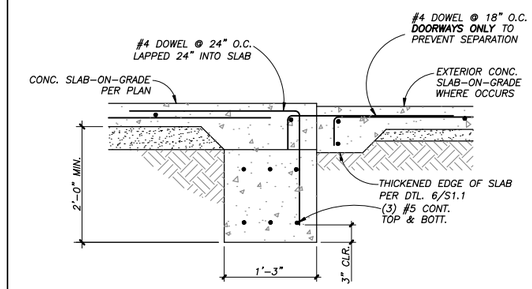

5

2

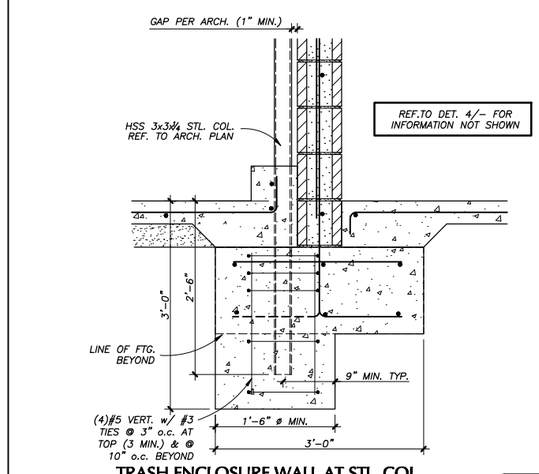

TRASH ENCLOSURE WALL AT STL. COL.

NO SCALE

9

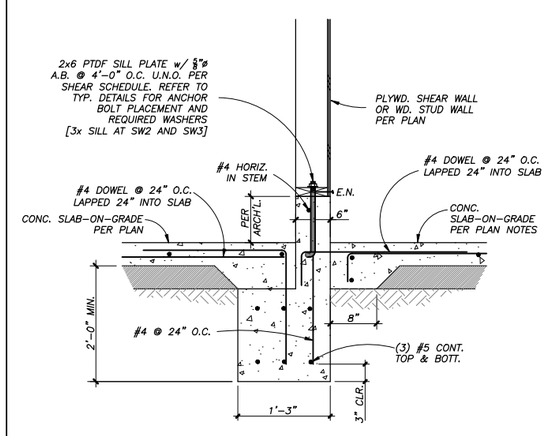

6

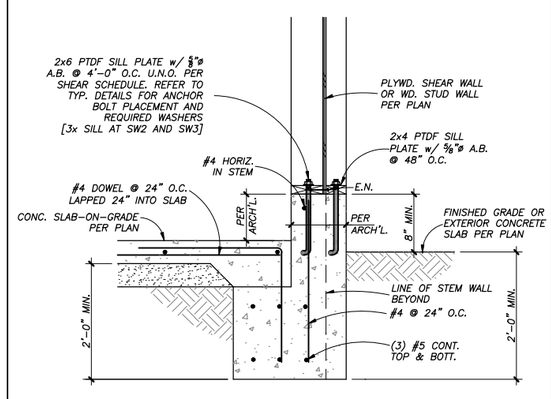

DOUBLE WALL FOOTING

3

12

FILE PATH & NAME: P:\PROJECTS\1-SWA PROJECTS\17044 – STARBUCKS RIVIERA\STRUCT\17044_S3_DETAILS.DWG PLOTTED: 7:20 PM

THIS SHEET WAS ORIGINALLY PRINTED ON A 24"x36" SHEET.

Stork, Wolfe, & Associates
SWA Structural Engineers
599 Hillcrest St., Ste. H, San Luis Obispo, CA. 93401
Tel. (805) 548-0500 Fax: (805) 548-0501

RASMUSSEN & ASSOCIATES
Architecture
Planning
Interiors
21 S. California Street
Fourth Floor
Ventura, California 93001
(805) 648-1234

2018-01-16 PRELIMINARY SET
NOT FOR CONSTRUCTION

Sheet Title: STRUCTURAL DETAILS

Revisions	
R&A No:	A161305
Date:	9/25/17
Drawn:	
Checked:	JW
Consult. No:	SWA 17044

RIVIERA SHOPPING CENTER
STARBUCKS COFFEE HOUSE
4710 TELEPHONE ROAD
VENTURA, CALFORNIA 93003

Sheet No.
S4.1

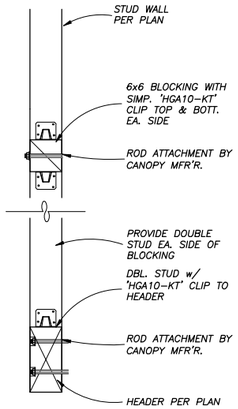

TYPICAL AWNING ATTACHMENTS

10

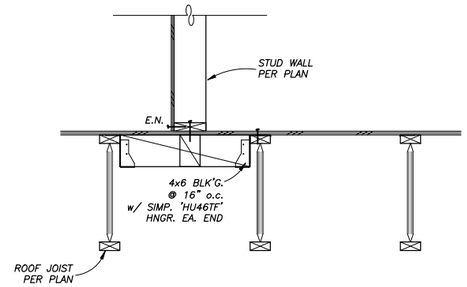

7

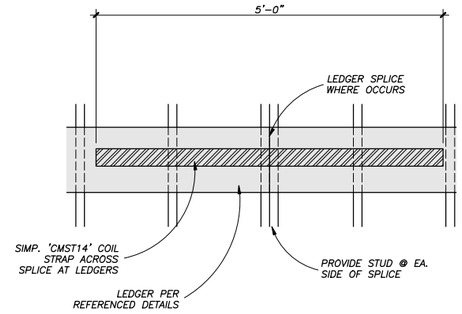

SPLICES AT LEDGERS WHERE OCCURS

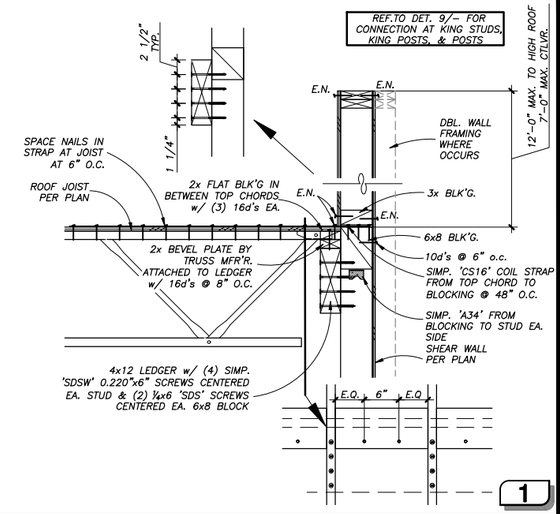

1

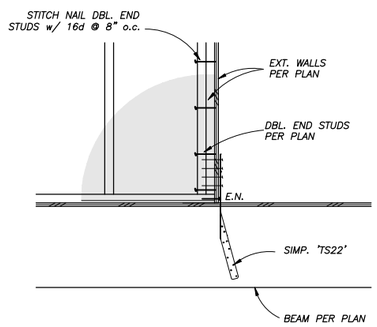

11

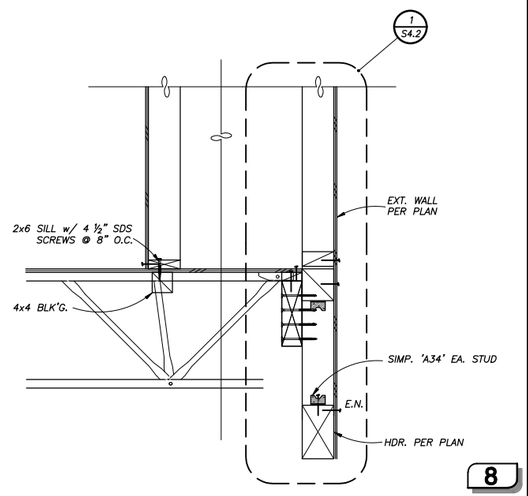

8

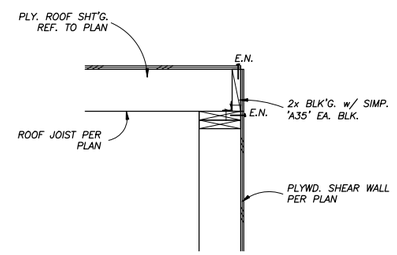

5

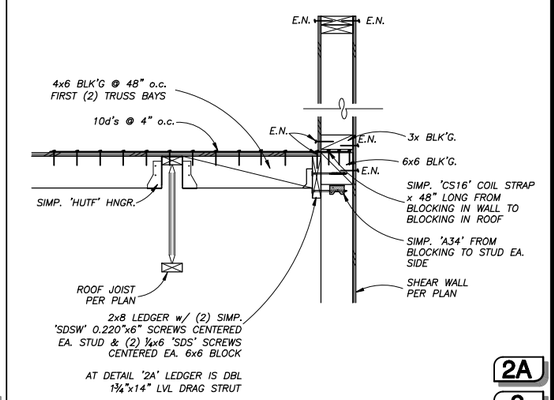

2A

2

12

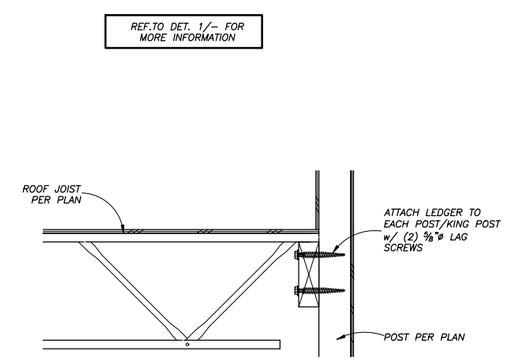

9

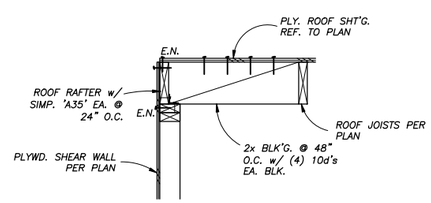

6

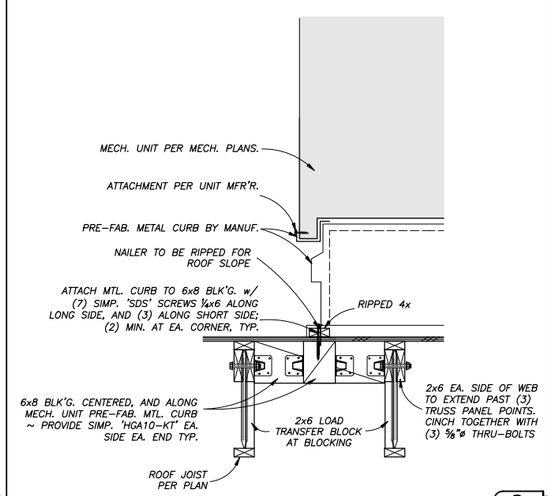

3

RASMUSSEN & ASSOCIATES
Architecture
Planning
Interiors
21 S. California Street
Fourth Floor
Ventura, California 93001
(805) 648-1234

Stork, Wolfe, & Associates
SWA Structural Engineers
599 Higuera St., Ste. H, San Luis Obispo, CA. 93401
Tel. (805) 548-0800 Fax: (805) 548-0801

2018-01-16 PRELIMINARY SET
NOT FOR CONSTRUCTION

Sheet Title: STRUCTURAL DETAILS

Revisions	
R&A No:	A161305
Date:	9/25/17
Drawn:	
Checked:	JW
Consult. No:	SWA 17044

RIVIERA SHOPPING CENTER
STARBUCKS COFFEE HOUSE
4710 TELEPHONE ROAD
VENTURA, CALIFORNIA 93003

Sheet No.
S4.2